# ME5010

## Magnetic sensor

**MEK3060-BPKG/AS-514-TPS**

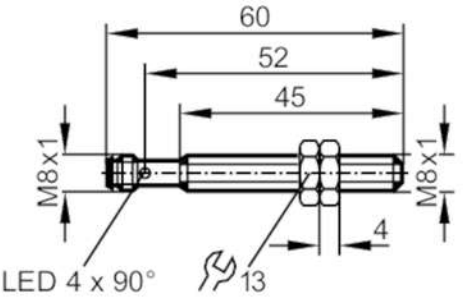


| | | |
|---|---|---|
| **Product characteristics** | | |
| Electrical design | | PNP |
| Output function | | normally open |
| Sensing range | [mm] | 60;  (referred to magnet M 4.0) |
| Housing | | threaded type |
| Dimensions | [mm] | M8 x 1 / L = 60 |
| **Application** | | |
| Special feature | | Gold-plated contacts |
| **Electrical data** | | |
| Operating voltage | [V] | 10...30 DC;  ("supply class 2" to cULus) |
| Current consumption | [mA] | < 10 |
| Protection class | | III |
| Reverse polarity protection | | yes |
| **Outputs** | | |
| Electrical design | | PNP |
| Output function | | normally open |
| Max. voltage drop switching output DC | [V] | 2.5 |
| Permanent current rating of switching output DC | [mA] | 200 |
| Switching frequency DC | [Hz] | 5000 |
| Short-circuit protection | | yes |
| Type of short-circuit protection | | pulsed |
| Overload protection | | yes |
| **Detection zone** | | |
| Sensing range | [mm] | 60;  (referred to magnet M 4.0) |
| Response sensitivity | [mT] | 1.2 |
| **Accuracy / deviations** | | |
| Hysteresis | [% of Sr] | 1...10 |
| **Operating conditions** | | |
| Ambient temperature | [°C] | -25...75 |

# ME5010

## Magnetic sensor

**MEK3060-BPKG/AS-514-TPS**

| | | | |
|---|---|---|---|
| Protection | | IP 67 | |
| **Tests / approvals** | | | |
| EMC | | EN 61000-4-2 ESD | 4 kV CD / 8 kV AD |
| | | EN 61000-4-3 HF radiated | 10 V/m |
| | | EN 61000-4-4 Burst | 2 kV |
| | | EN 61000-4-5 Surge | 0,5 kV line to line, Ri: 2 Ohm |
| | | EN 61000-4-6 HF conducted | 10 V |
| | | EN 55011 | class B |
| MTTF | [years] | 2935 | |
| **Mechanical data** | | | |
| Weight | [g] | 26.5 | |
| Housing | | threaded type | |
| Dimensions | [mm] | M8 x 1 / L = 60 | |
| Thread designation | | M8 x 1 | |
| Materials | | housing: stainless steel (1.4404 / 316L); sensing face: PBT orange | |
| **Displays / operating elements** | | | |
| Display | | switching status | 1 x LED, yellow |
| **Accessories** | | | |
| Items supplied | | lock nuts: 2 | |
| **Remarks** | | | |
| Pack quantity | | 1 pcs. | |

**Electrical connection - plug**

Connector: 1 x M8; coding: A; Contacts: gold-plated

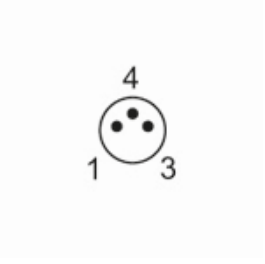


Connection

