A2613048

ROUND KNOB 13.5, with line

Suitable for rotary potentiometer with round shaft ends according to DIN 41591. Collet system for convenient knob assembly from the front and simple adjustment (with adjustment key - sep. article). Center hole with chamfer. Black marking.
Max. torque: assembly = 0.5 Nm, function = 0.5 Nm.

Supply
1 round knob



TECHNICAL DATA

Material	ABS (UL 94 HB)
Colour	dusty grey RAL 7037
Standards	RoHS compliant, REACH compliant

Diameter	13 mm
Height	15 mm
Bore hole	4 mm

Please take the dimensions from current parts. These are subject to material- and manufacturing-specific tolerances.

PURCHASING DATA

Weight/1 part	6.2 g
Customs tariff number (OKW product)	84879090
Country of manufacture	Germany

CUSTOMISING OPTIONS

A2613048

ROUND KNOB 13.5, with line

What else do you need to create your own personal product? We can supply our enclosures and tuning knobs fully modified to suit your electronic components and design requirements. Please advise for anything else we can do for you.

Customising options for A2613048



Machining



Printing



Installation / Assembly of accessories

A2613048

ROUND KNOB 13.5, with line

SYSTEM COMPONENTS TO COMPLETE



A4113000
Cover 13.5, without line
ABS (UL 94 HB)
black RAL 9005



A4113002
Cover 13.5, without line
ABS (UL 94 HB)
red RAL F12/0-10



A4113004
Cover 13.5, without line
ABS (UL 94 HB)
yellow RAL F12/0-1



A4113005
Cover 13.5, without line
ABS (UL 94 HB)
green RAL F12/0-43



A4113006
Cover 13.5, without line
ABS (UL 94 HB)
light blue RAL 5012



A4113007
Cover 13.5, without line
ABS (UL 94 HB)
pebble grey RAL 7032



A4113008
Cover 13.5, without line
ABS (UL 94 HB)
dusty grey RAL 7037



A4113100
Cover 13.5, with line
ABS (UL 94 HB)
black RAL 9005



A4113102
Cover 13.5, with line
ABS (UL 94 HB)
red RAL F12/0-10



A4113104
Cover 13.5, with line
ABS (UL 94 HB)
yellow RAL F12/0-1



A4113105
Cover 13.5, with line
ABS (UL 94 HB)
green RAL F12/0-43



A4113106
Cover 13.5, with line
ABS (UL 94 HB)
light blue RAL 5012



A4113107
Cover 13.5, with line
ABS (UL 94 HB)
pebble grey RAL 7032



A4113108
Cover 13.5, with line
ABS (UL 94 HB)
dusty grey RAL 7037

A2613048

ROUND KNOB 13.5, with line

ACCESSORY "SCREWS"



A6207009
Round nut M7 x 0.75



A6210009
Round nut M10 x 0.75



A6295009
Round nut 3/8"-32G



A6300000
Spanner



A7513000
Nut cover 13.5, without line
ABS (UL 94 HB)
black RAL 9005



A7513010
Nut cover 13.5, with line
ABS (UL 94 HB)
black RAL 9005



A7513018
Nut cover 13.5, with line
ABS (UL 94 HB)
dusty grey RAL 7037

ACCESSORY



A4213000
Arrow disk 13.5
ABS (UL 94 HB)
black RAL 9005



A4213002
Arrow disk 13.5
ABS (UL 94 HB)
red RAL F12/0-10



A4213008
Arrow disk 13.5
ABS (UL 94 HB)
dusty grey RAL 7037



A6402005
Adjusting key 10/13/16
ABS (UL 94 HB)
green

Subject to technical modification without notice. © by OKW Gehäusesysteme, Buchen/Germany.

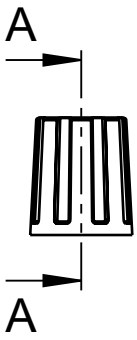

Schnitt A-A

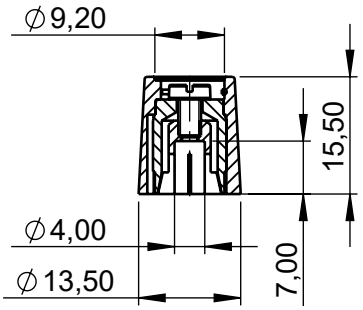



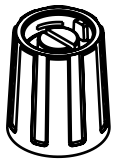

Bitte die Maße an aktuellen Teilen abnehmen.
Diese unterliegen material und produktionsspezifischen Fertigungstoleranzen

Please take the dimensions from current parts.
These are subject to material- and manufacutring-specific tolerances

Informationskopie
wird nicht aktualisiert
Copy for Information
will not be updated

Erst. am: 02.04.2020	Toleranzen: DIN 16901 T130	Status: ENTWICKLUNG	DIN 6 Teil 2
Erst. von: J. Farrenkopf			
Freig. am:	Volumen:	Zeichnungsart: KUNDE	
Freig. von:			
Revision: 01			

This document contains proprietary information of OKW Gehäusesysteme GmbH and is tendered subject to the conditions that the information be retained in confidence not be reproduced or copied and not be used or incorporated in any product.

Technische Änderungen vorbehalten. Irrtümer oder Druckfehler begründen keinen Anspruch auf Schadenersatz. Wichtige Einbaumaße bitte direkt mit dem aktuellen Produkt abstimmen.

Subject to technical modification without prior notice. Typographical and other errors do not justify any claim for damages. All dimensions should be verified using an actual moulded part.

Sous reserve de modifications techniques. Toute erreur ou faute d'impression ne justife aucune demande d'indemnisation. Nous prions les clients de verifer les dimensions des composants avec les boitiers avant le montage.

OKW GEHÄUSE SYSTEME

KOMBIKNOEPFE-SPANNZANGE 13,5
Rundknopf 13,5 mit Spannzange d=4mm

A2*1304*

M 1:1

Für dieses Dokument behalten wir uns alle Urheberrechte vor. Es darf auch auszugsweise weder vervielfältigt noch Dritten in irgendeiner Form zugänglich gemacht werden.

Dateiname: 00027185