Filling unit, electrically operated, Series AS5-SSU

R412009283

General series information
Series AS5

- The AVENTICS Series AS5 is a modular, versatile maintenance unit for universal application. This Series offers compact dimensions, is highly efficient, lightweight and easy-to-use. The AVENTICS Series AS guarantees reliability, safety, and efficiency with a simplified assembly and maintenance efforts.



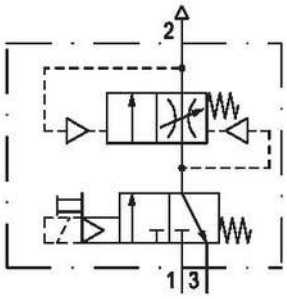

Technical data

Industry	Industrial
Type	adjustable filling time
Activation	Electrically
Nominal flow Qn	8750 l/min
Compressed air connection	G 1
Working pressure min.	2.5 bar
Working pressure max	10 bar
DC operating voltage	24 V
Sealing principle	soft seal
Pilot	Internal

Connection type	Pipe connection
Parts	3/2-directional valve Filling valve
Can be assembled into blocks	Can be assembled into blocks
basic valve with electrical connector	Basic valve with pilot valve
Type	Poppet valve
Min. ambient temperature	-10 °C
Max. ambient temperature	50 °C
Medium	Compressed air Neutral gases
Max. particle size	25 µm
Compressed air connection, exhaust	G 1/2
Nominal flow Qn 1 to 2	8750 l/min
Nominal flow Qn 2 to 3	3700 l/min
Operating voltage	24 V DC
Power consumption DC	2 W
Duty cycle	100 %
Protection class	IP65
Connector standard	ISO 15217
Protection class with connection	IP65
Reverse polarity protection	Protected against polarity reversal
Electrical connection type 2	Plug
Electrical connection 2, thread size	ISO 15217, form C
Weight	0.924 kg

Material

Housing material	Polyamide
Seal material	Acrylonitrile butadiene rubber
Material threaded bushing	Die cast zinc
Material front plate	Acrylonitrile butadiene styrene
Part No.	R412009283

Technical information

The pressure dew point must be at least 15 °C less than ambient and medium temperature and may not exceed 3 °C.

Nominal flow Qn with secondary pressure p2 = 6 bar at Δp = 1 bar

A change in the flow direction (from air supply on the left to air supply on the right) occurs by rotating installation by 180° about the vertical axis. Please see the operating instructions for further details.

Do not position filling valves or filling units upstream of open consumers, such as nozzles, air barriers, air curtains, since these may prevent through connection of components.

The filling valve builds up pressure slowly in the pneumatic systems, i.e. prevents a sudden pressure build-up during a recommissioning after a mains pressure failure or avoids emergency OFF switching. This allows dangerous abrupt cylinder motions to be avoided.

Fig. 4: Filling unit with pilot valve, push-in fitting M12x1

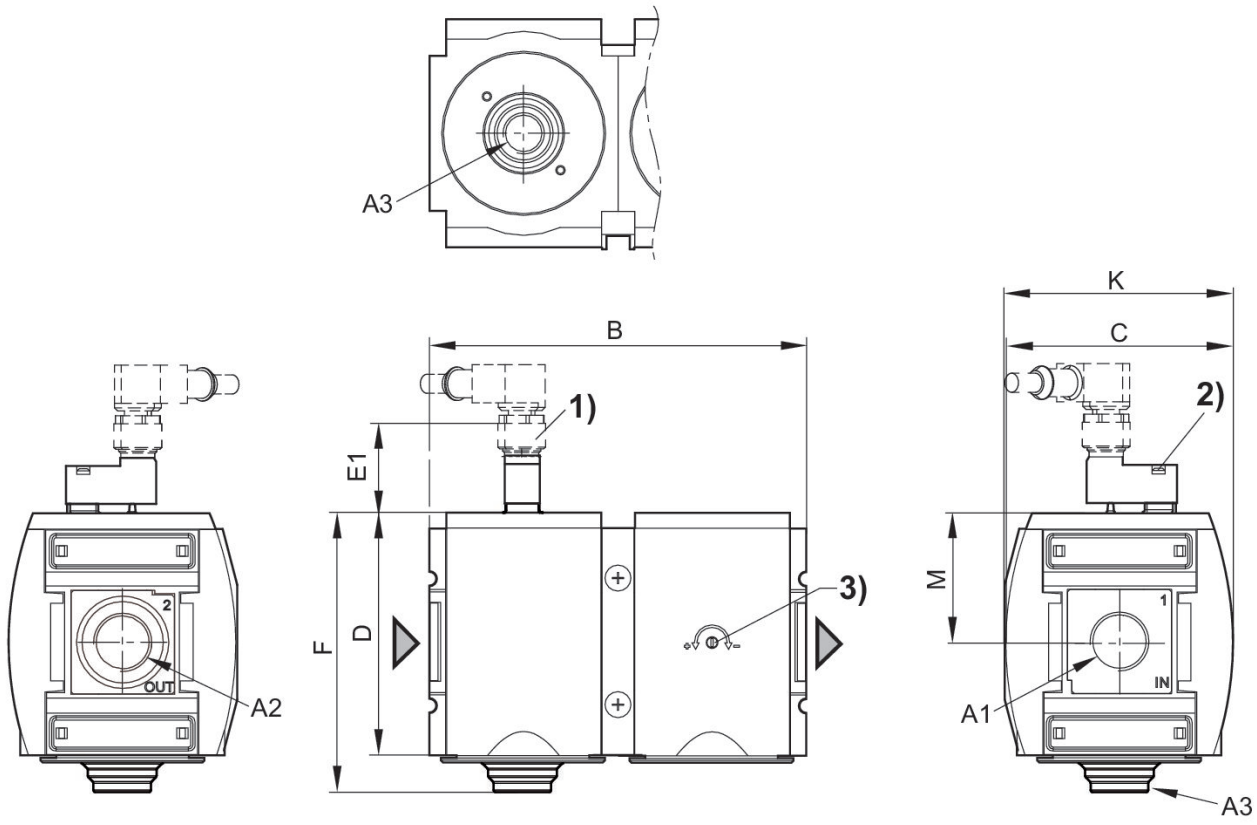

A1 = input A2 = output A3 = ventilation port
1) plug M12
2) Manual override
3) Adjustment screw for filling time

Dimensions in mm

Part No.	A1	A2	A3	B	C	D	E1	F	M
R412009378	G 1	G 1	G 1/2	170	103	109	39	125	58

Fig. 1: Filling unit without pilot valve with porting configuration for series DO16

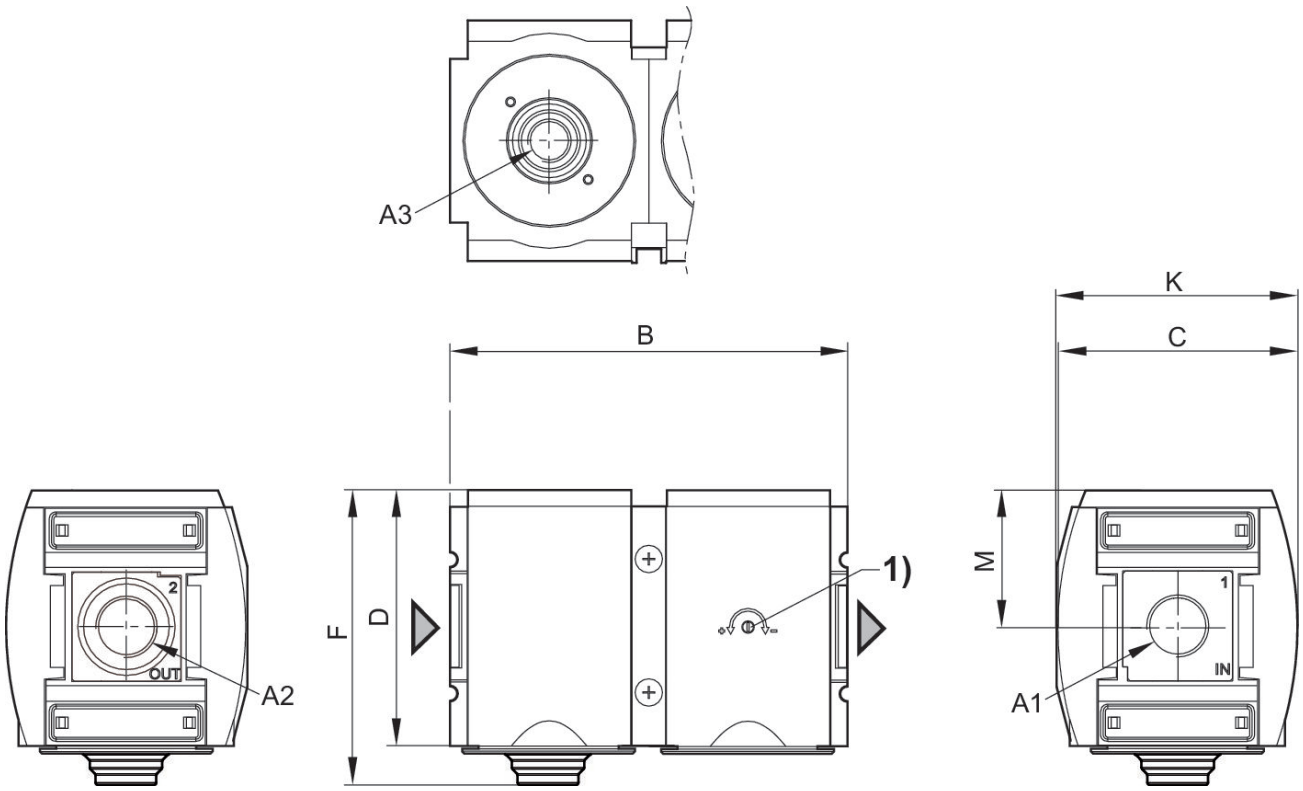

A1 = input A2 = output A3 = ventilation port
1) Adjustment screw for filling time

Dimensions in mm

Part No.	A1	A2	A3	B	C	D	F	K	M
R412009277	G 3/4	G 3/4	G 1/2	170	103	109	125	103.5	58
R412009282	G 3/4	G 1	G 1/2	170	103	109	125	103.5	58

Fig. 2: Filling unit with transition plate for pilot valve series DO30

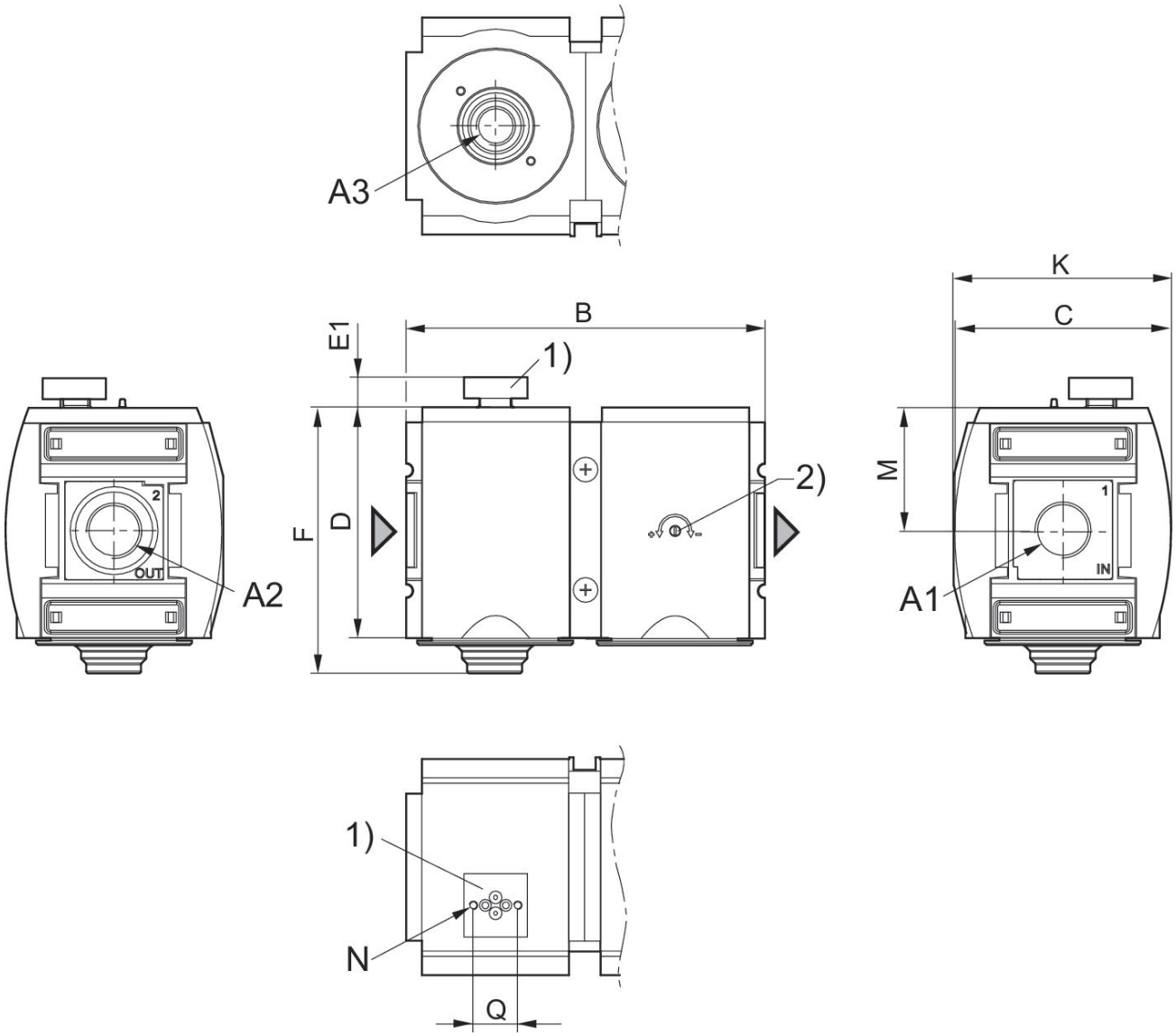

A1 = input A2 = output A3 = ventilation port
1) Transition plate with CNOMO porting configuration for pilot valve DO30
2) Adjustment screw for filling time

Fig. 3: Filling unit with pilot valve and port for electrical connector form C

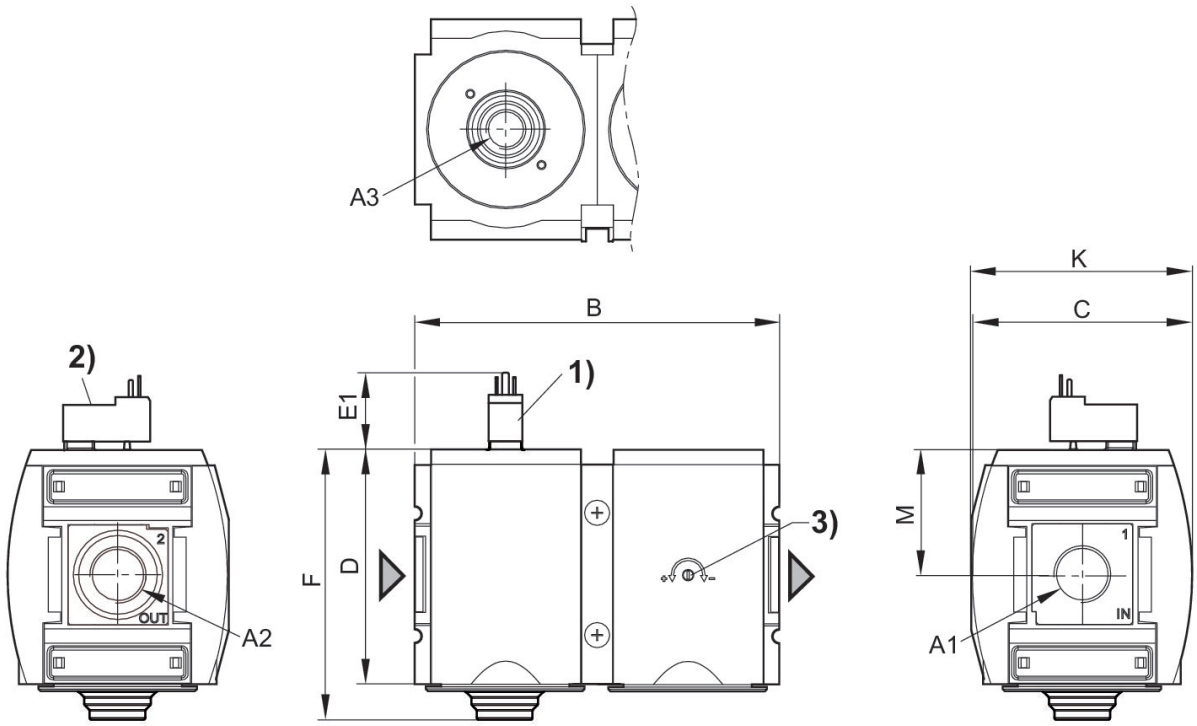

A1 = input A2 = output A3 = ventilation port
1) Connection for valve plug connector according to ISO 15217 (form C)
2) Manual override
3) Adjustment screw for filling time

Dimensions in mm

Part No.	A1	A2	A3	B	C	D	E1	F	K
R412009278	G 3/4	G 3/4	G 1/2	170	103	109	25.1	125	103.5
R412009279	G 3/4	G 3/4	G 1/2	170	103	109	25.1	125	103.5
R412009280	G 3/4	G 3/4	G 1/2	170	103	109	25.1	125	103.5
R412009283	G 1	G 1	G 1/2	170	103	109	25.1	125	103.5
R412009284	G 1	G 1	G 1/2	170	103	109	25.1	125	103.5
R412009285	G 1	G 1	G 1/2	170	103	109	25.1	125	103.5

Part No.	M
R412009278	58
R412009279	58
R412009280	58
R412009283	58
R412009284	58
R412009285	58

Secondary pressure while filling

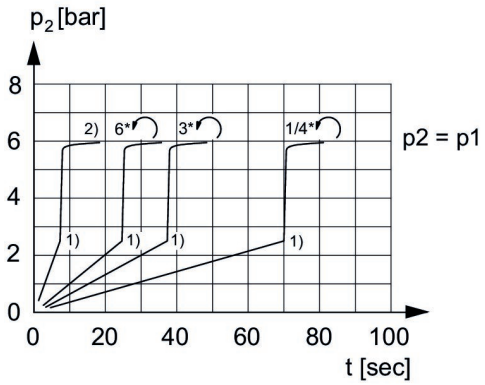

p1 = Working pressure
p2 = Secondary pressure
t = filling time, adjustable via adjustment screw (throttle)
1) Switching point: adjustable filling time, fixed change-over pressure ≈ 0.5 x p1 (50%)
2) Throttle fully opened
* Adjustment screw rotations

Flow rate characteristic, p2 = 0,05 - 7 bar

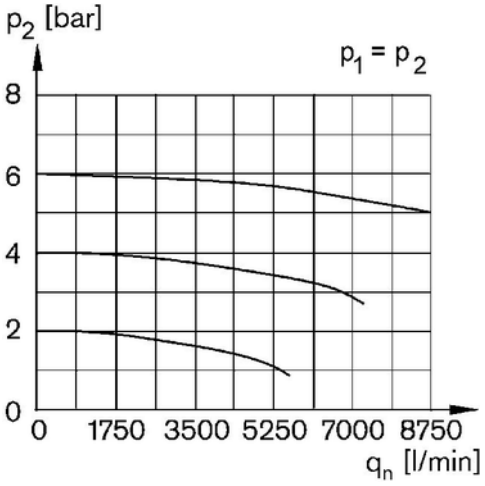

p1 = Working pressure p2 = Secondary pressure qn = Nominal flow

Pin assignment M12x1

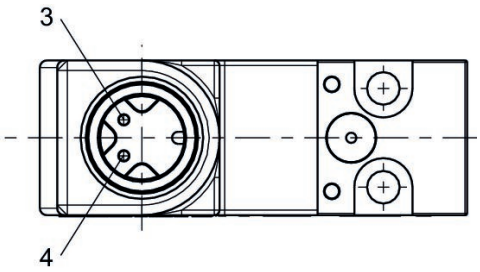

3: +/-
4: +/-

Accessories overview

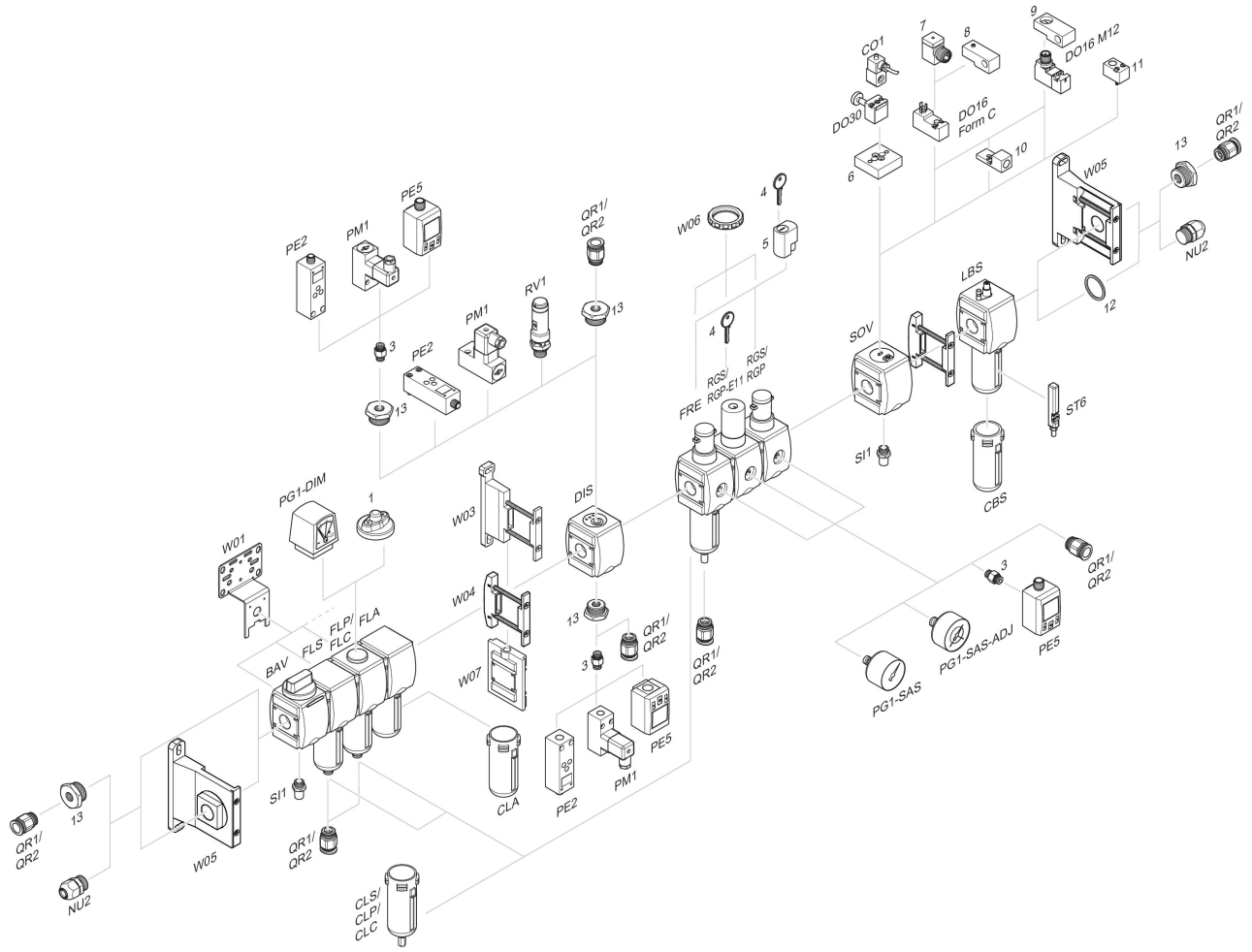

1 = contamination display 3 = Double nipple 4 = Key for E11 locking 5 = mortise lock 6 = Transition plate DO30 7 = Adapter, Series CON-VP 8 = Mounting aid DO16, form C 9 = Mounting aid DO16, M12 10 = Adapter for external pilot air 11 = Adapter pneumatic operation 12 = Sealing ring 13 = Reducing nipple