Brand of NTN corporation

Technical data

UCEHE.204

Bearing units



Grey cast housing, radial insert ball bearing with socket set screws,seal with slinger

KIT CONTENT

UC204G2, EHE204

VISUAL (S)

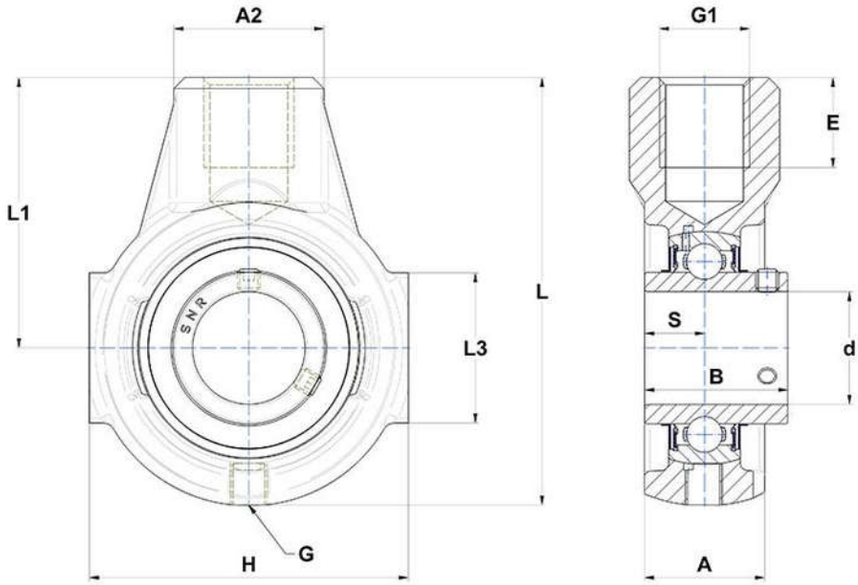

PRODUCT DEFINITION

Brand	SNR
A - Housing width	25 mm
A2	30 mm
B - Width of Inner Ring	31 mm
d - Shaft diameter	20 mm
E - Mounting hole thread depth	21 mm

NTN Europe
1 rue des Usines · BP 2017 · 74010 Annecy Cedex · France · Tel. +33 (0)4 50 65 30 00
S.A. au capital de 322 639 919 € · RCS ANNECY B 325 821 072 · Id. Fiscale : FR 48 325 821 072
SIRET 325 821 072 00015 · Code APE 2815 Z · Code NACE 28.15

PRODUCT DEFINITION	
G - Grease fitting	R1/8"
G1 - Thread size	M16
H - Housing length, width or diameter	65 mm
L - Housing length	91 mm
L1 - Distance attachment end face to bearing centerline	58 mm
L3 - Length of guidance slot/face	38 mm
S - Distance front side/bearing centre	12,7 mm

PRODUCT PERFORMANCE	
C - Dynamic load rating	12800000 mN
C0 - Static load rating	6650000 mN
Operating temperature min.	253,15 °K
Operating temperature max.	373,15 °K

OTHER FEATURES	
Mass	0,57 kg
Recommended tightening torque for set screw	5.5 N-m