# E37640

## Thermowell for temperature sensors

THERMOWELL, D6/ G1/2 /L=250

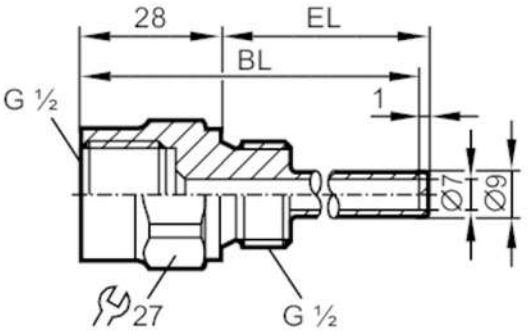


| | | |
|---|---|---|
| **Application** | | |
| Design | | for temperature sensors EL = 250 mm |
| Pressure rating | [bar] | 100 |
| Note on pressure rating | | < 250 °C |
| **Mechanical data** | | |
| Weight | [g] | 171.1 |
| Materials | | stainless steel (1.4571/316Ti ) |
| Sensor connection | | G 1/2 Ø 6 mm |
| Process connection | | G 1/2 |
| Installation length EL | [mm] | 224 |
| Bore length BL | [mm] | 250 |
| **Remarks** | | |
| Pack quantity | | 1 pcs. |