87045 LIMOGES Cedex
Phone : 05 55 06 87 87 – Fax : 05 55 06 88 88

DLP PVC trunking & accessories

Number(s) : 0 104 11/12/21 to 24/27/28/32/33/52/53/59/60 to 65, 0 104 67/69/70/72/73/75/76, 0 105 20 to 22/24/26/82/83/84, 0 106 01 to 03/05 to 07/19/21/23/35/36/38/39/50/58/91/92/95/96, 0 107 00 to 03/05 to 08/10/11/22/35 to 40/63 to 65/67/84 to 86, 0 107 89/90/92/93/95/96/98, 0108 00 to 02/04/06

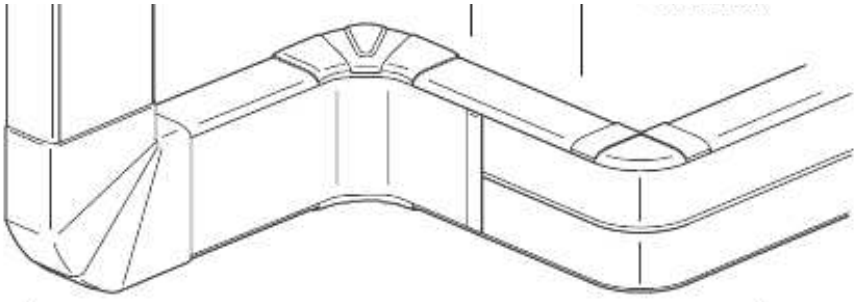

CONTENTS PAGES

1.Range	1 to 3
2.Finishing Accessories	3 to 7
3.Complementary Accessories	8 to 9
4.Supports	10 to 13
5.Accessories	14 to 17
6.Technical characteristics	18 to 19
7.Material characteristics	19

1. RANGE

DLP PVC trunking offers:

- the distribution, the protection and the derivation of various cables in an electrical installation.
- trunkings, finishing accessories (end, joint of lid, joint of body, interior angle, exterior angle, flat angle, derivation)
- all the easy ways/advantages for the installation.
- to comply with the norm EN 50085-2-1, safety and technical performance.
- a flexibility with the installation and maintenance:

Available in length of 2m.

Fixing by:
- joining (cartridge of adhesive neoprene for glue gun ref. 0 309 49)
- wall plugs for immediate fixing (without screw nor nail ref. 0 308 99)
- DLP rapid wall plug ref. 0 308 97 (for 10mm min. plasterboard walls at least 20mm away from a concrete surface. For fixing DLP plastic trunking in a single operation.
- Spit end (the fast fixing of sections ref. 0 106 95 allows)
- screw, nails…

For cutting all plastic bodies, use a saw or a DLPlus cutting unit for PVC DLP (ref. 0 306 98)

Possibility of adapting removable separations.

White color RAL 9003

Assembly of the body and covers by clips (disassembling with the assistance tool ex: screwdriver)

1. RANGE (continued)

1.1. Full assembled DLP trunking: supplied with flexible cover(s).

Number of compartments	Covers width (mm)	Dimensions (mm)	Body and covers complete
	65	35 x 80	104 61
	65	50 x 80	104 62
	65	50 x 105	104 24
	65 65	50 x 150	104 27
	40 65 40	50 x 170	104 67
	65 65 65	50 x 220	104 28
	85	35 x 105	104 63
	85	50 x 105	104 64
	85 85	50 x 195	104 70
	130	50 x 150	104 65
	180	50 x 195	104 69
	130	65 x 150	104 75
	180	65 x 195	104 76

1. RANGE (continued)

1.2. Adaptable DLP trunking

System to be composed according to the specificities of the building site.
Available in length of 2m without cover.
Universal applications, open solutions (assembly of the Mosaic program, Programs Plexo, Hypra, Lexic etc…)

TRUNKING			
Number of compartments	Cover(s) width (mm)	Dimensions (mm)	Bodies
1	65	35 x 80	104 11
	85	35 x 105	104 21
	85	50 x 80	104 12
	85	50 x 105	104 22
	85	65 x 105	104 23
	130	50 x 150	104 32
	130	65 x 150	104 33
	180	50 x 195	104 52
	180	65 x 195	104 53
2	65 65	65 x 150	104 33
	85 85	50 x 195	104 52
	85 85	65 x 195	104 53
	65 130	65 x 220	104 59
3	65 40 65	50 x 195	104 52
	65 40 65	65 x 195	104 53
	65 65 65	65 x 220	104 59

1. RANGE (continued)

1.3. Covers

Example with cover 0 105 21 :

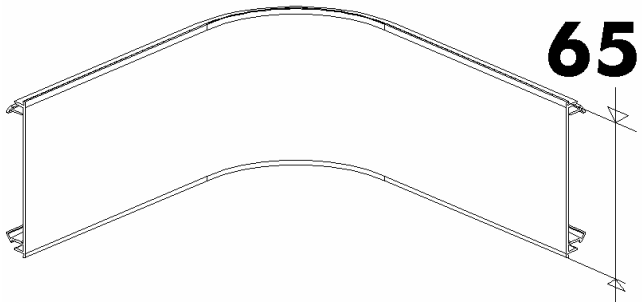

Covers available in length of 2m.
Cut out using a saw (standard hacksaw) and of a cut box (ref. 0 306 98)
- fixes itself on the whole of the trunking including in the interior/exterior angles (it follows the configuration of the building site).
- clips easy even in the angles and declip using a tool to preserve the safety of the installation.
- the flexible cover of offer DLP make it possible to obtain a system more evolutionary, flexible, with a new aesthetics and allowing a perfect separation of the currents.
White color RAL 9003

Dimensions :

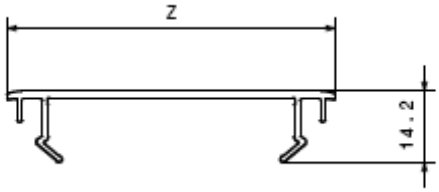

References	Z(mm)	thickness
0 105 20	40	1.5mm
0 105 21	65	1.5mm
0 105 22	85	1.5mm
0 105 24	130	1.8mm
0 105 26	180	1.9mm

Assembly bodies-covers by clips (disassembling using a tool e.g.: screwdriver)

1. RANGE (continued)

1.4. Separations

Separation partition ref. 0 105 82/83/84

Delivered in length of 2m
White Color.

For the separation of various types of currents allows (sector, telephone, data processing…)
Assembly with the body by clips and by gluing resing for ref. 0 105 84

Pack by 16m for ref 0 105 84
Pack by 24m for ref 0 105 82
Pack by 48m for ref 0 105 83

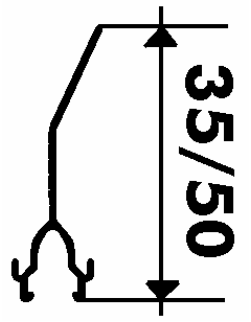

ref 10582

References	Use with ref
0 105 82	0 104 12/21/22/24/27/28/32/62/67/70
0 105 83	0 104 33/53/59
0 105 84	0 104 11/21

Division partition ref. 0 104 72/73

Available in length of 2m
White color RAL 9003

For the separation of various types of currents allows (sector, telephone, data processing…)
Assembly with the body by clips.

Pack by 48m for ref 0 104 72
Pack by 36m for ref 0 104 73

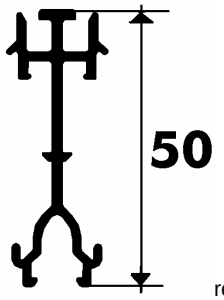

ref 0 104 72

References	Use with ref
0 104 72	0 104 22/32/70
0 104 73	0 104 33/53/59

2. FINISHING ACCESSORIES

2.1. End cap ref. 0 107 00/01/02/03/05/06/07/08/10/11/22

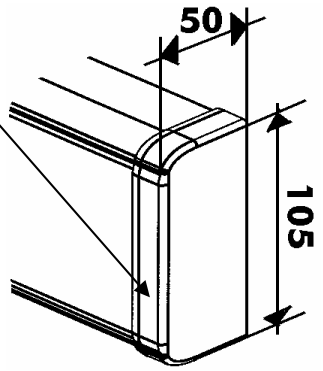

White color RAL 9003

Allows to block the end of the body:
- respect of the protection degree
- improvement of aesthetics (covering of the cut)
- left or right end cap

Assembly on the body by fitment and screwing.
The end cap is delivered with a screw and of a part of closing

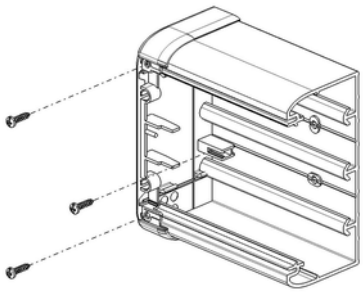

Dimensions.

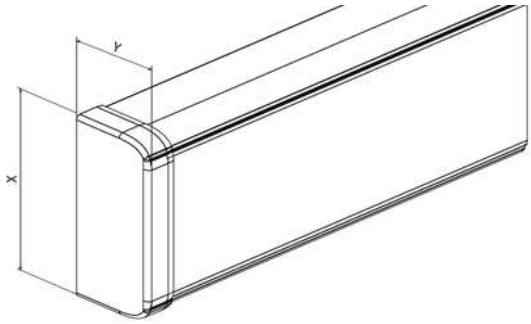

References	X(mm)	Y(mm)	Use with ref
0 107 00	105	50	0 104 24
0 107 01	105	35	0 104 21
0 107 02	105	50	0 104 22
0 107 03	150	50	0 104 32/27
0 107 05	220	50	0 104 28
0 107 06	150	65	0 104 33
0 107 07	195	65	0 104 53
0 107 08	220	65	0 104 59
0 107 10	170	50	0 104 67
0 107 11	195	50	0 104 70
0 107 22	80	35/50	0 104 11/12/62

2. FINISHING ACCESSORIES (continued)

2.2. Internal angle ref. 0 106 01/02/03/05/06/07/50/58

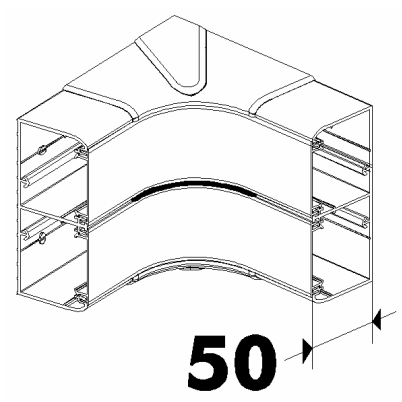

White color RAL 9003

The two pieces junction in the interior angle:
- avoid the cut of miter on the trunking
- respect of the degree protection
- aesthetics improves (covering of the cut and not or little extra thickness)

Assembly on the body by clipsage.

The internal angles thus ensure the continuity of the flexible cover on the angles and do not require cut of cover, and keep aesthetics.
Variable internal angles of 80 with 100°.

The interior angles are delivered with:
- 1 element to some extent high
- 1 element to some extent low part

To simplify the offer, some references of angles are delivered with junctions of partition (in the case as of profiled with several compartments).

The internal angles are delivered with 2 elements (ex: for trunking 1 compartment) or with 3 elements (ex: for trunking 2 compartments with partition junction)

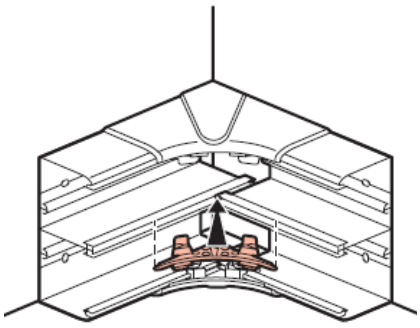

References	X(mm)	Partition junction	Use with ref
0 106 01	35	0	0 104 11/21
0 106 02	50	0	0 104 12/22/32/62
0 106 03	65	0	0 104 33/53
0 106 05	50	0	0 104 24
0 106 06	50	1	0 104 27/70
0 106 07	65	1	0 104 33/53/59
0 106 50	50	2	0 104 28/67
0 106 58	65	2	0 104 53/59

The supports of equipment should not be installed at least with 100mm on each side of the edge of the angles.

2. FINISHING ACCESSORIES (continued)

2.3. External angle ref. 0 106 19/21/22/23/35/36/38/39

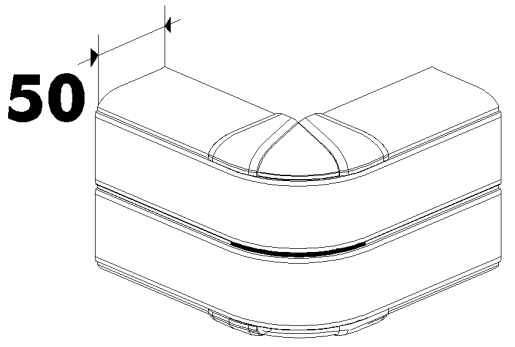

White color RAL 9003

The junction in exterior angle of two pieces of the same section:
- avoid the cut of miter on the trunking
- respect of the degree protection
- aesthetics improves (covering of the cut and not or little extra thickness)

Assembly on the body by clipsage.

The external angles thus ensure the continuity of the flexible cover on the angles and do not require cut of cover, and keep aesthetics.
Variable external angles of 60 with 120°.

The external angles are delivered with:
- 1 element to some extent high
- 1 element to some extent low part

To simplify the offer, some references of angles are delivered with junctions of partition (in the case as of profiled with several compartments).

The external angles are delivered with 2 elements (ex: for trunking 1 compartment) or with 3 elements (ex: for trunking 2 compartments with partition junction)

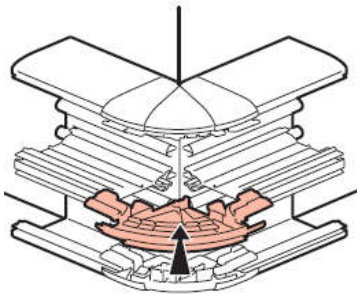

References	X(mm)	Partition junction	Use with ref
0 106 19	50	0	0 104 24
0 106 21	35	0	0 104 11/21
0 106 22	50	0	0 104 12/22/32/62
0 106 23	65	0	0 104 33/53
0 106 35	50	1	0 104 27/70
0 106 36	65	1	0 104 33/53/59
0 106 38	50	2	0 104 28/67
0 106 39	65	2	0 104 53/59

The supports of equipment should not be installed at least with 100mm on each side of the edge of the angles.

2. FINISHING ACCESSORIES (continued)

2.4. Flat angle ref.0 107 67/84/85/86/89/90/92/93/95/96/98

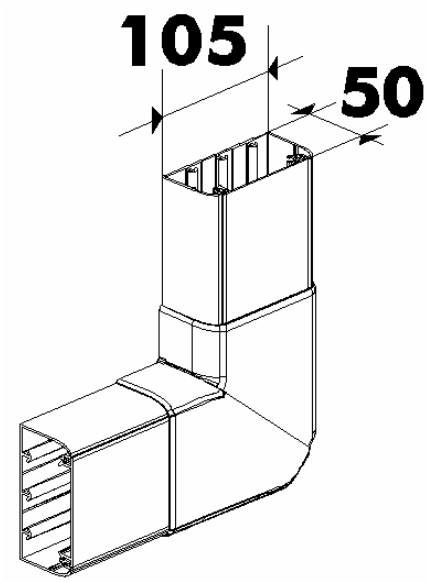

White color RAL 9003

The junction in flat angle of two same sections allows:
- avoid the cut of miter on the trunking
- respect of the degree protection
- the distribution of the various currents preserves
- aesthetics (covering of the cut) improves

Assembly on the body by clipsage.

Flat angles are variable (90°+/- 2.5°).
The flat angles are delivered with 2 elements:

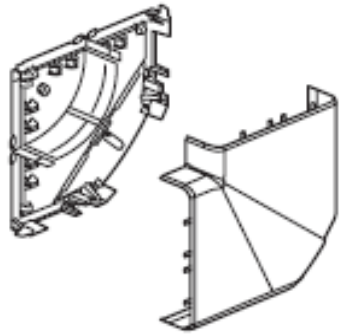

References	Trunking	Use with ref
0 107 67	80x35/50	0 104 11/12/62
0 107 84	105x35	0 104 21
0 107 85	105x50	0 104 22
0 107 86	105x50	0 104 24
0 107 89	150x50	0 104 27/32
0 107 90	150x65	0 104 33
0 107 92	195x50	0 104 70
0 107 93	195x65	0 104 53
0 107 95	220x50	0 104 28
0 107 96	220x65	0 104 59
0 107 98	170x50	0 104 67

2. FINISHING ACCESSORIES (continued)

2.5. Flat junction ref.0 107 35/36/37/38/39/40

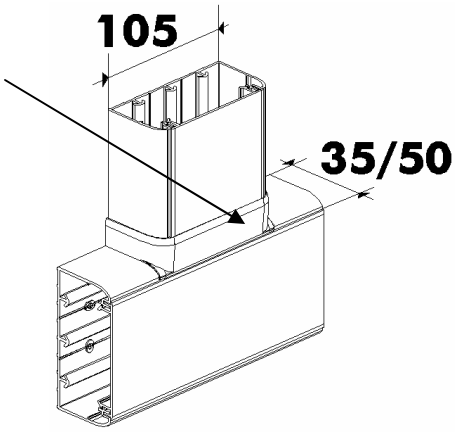

0 107 35 : To tap-off to an 80mm wide trunking
0 107 36 : To tap-off to an 105mm wide trunking equipped with an 85mm cover
0 107 37 : To tap-off to an 105mm wide trunking equipped with an 65mm cover
0 107 38 : To tap-off to an 105mm wide and 50mm deep trunking.
0 107 39 : To tap-off to an 80mm wide branch.
0 107 40 : To tap-off to an 105mm wide branch.

White color RAL 9003

The junction in “T” allows.
- respect of the degree protection
- aesthetics (covering of the cut) improves

Assembly on the body by clipsage

References trunking	To tap-off to an 80 mm wide trunking	To tap-off to an 105 mm wide trunking
0 104 62	0 107 35	-
0 104 24	0 107 39	0 107 40
0 104 27	0 107 35	0 107 36/37
0 104 28	0 107 35	0 107 36/37
0 104 11	0 107 35	-
0 104 12	0 107 35	-
0 104 21	0 107 35	0 107 36
0 104 22	0 107 35	0 107 36/37
0 104 32	0 107 35	0 107 36/37
0 104 33	0 107 35	0 107 38
0 104 53	0 107 35	0 107 38
0 104 59	0 107 35	0 107 38
0 104 67	0 107 35	0 107 36/37
0 104 70	0 107 35	0 107 36/37

2. FINISHING ACCESSORIES (continued)

2.6. Angled junction ref. 0 107 63/64/65.

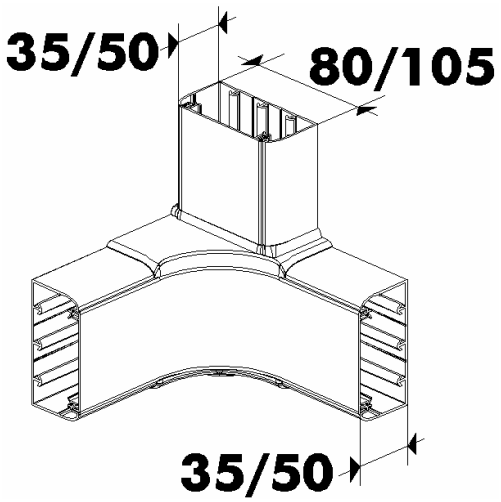

Angled junction (to be associated with the interior angles)

- the distribution of the various currents preserves
- respect of the degree protection
- aesthetics (covering of the cut) improve

Assembly on the body by clipsage.
White color RAL 9003

Assembly in angle on wall left-hand side ⇨ trunkings 50x80mm or 50x105mm.
Assembly in angle on wall right-hand side⇨ trunkings 50x80mm or 50x105mm.

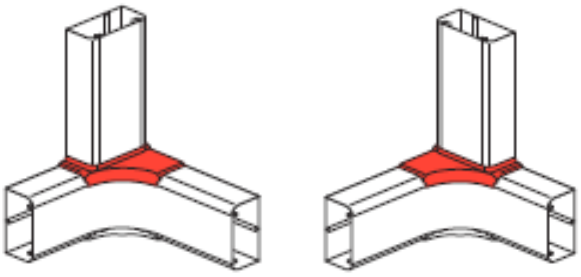

References trunking	Angled junction	Internal angle
0 104 62	0 107 63	0 106 02
0 104 24	0 107 65	0 106 05
0 104 27	0 107 63	0 106 06
0 104 28	0 107 63	0 106 50
0 104 11	0 107 63	0 106 01
0 104 12	0 107 63	0 106 02
0 104 21	0 107 63	0 106 01
0 104 22	0 107 63	0 106 02
0 104 32	0 107 63	0 106 02/06
0 104 33	0 107 64	0 106 03/07
0 104 53	0 107 64	0 106 03/07/58
0 104 59	0 107 64	0 106 07/58
0 104 67	0 107 63	0 106 50
0 104 70	0 107 63	0 106 06

2. FINISHING ACCESSORIES (continued)

2.7. Body joint ref. 0 106 91/92/96

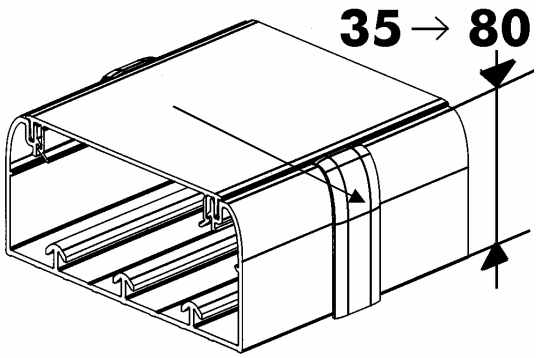

White color RAL 9003

Allows:
- the junction end to end of two same section
- respect of the degree protection
- to improve aesthetics (covering of the cut)
- fixing by adhesive, poses at the end of the installation

- to aligne bases during installation (ref. 0 106 91) and (ref.0 106 96 for trunking 105x50 with cover 65mm)
- to fit at the end of installation (ref. 0 106 92)

Ref 0 106 92, body joint, attached with adhesive :



Ref 0 106 91, body joint (for aligning bases during installation)



Ref 0 106 96, body joint (for aligning bases during installation for trunking 105x50 equipped with cover 65mm) :

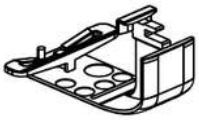

2. FINISHING ACCESSORIES (continued)

2.8. Cover joint ref. 0 108 00/01/02/04/06.

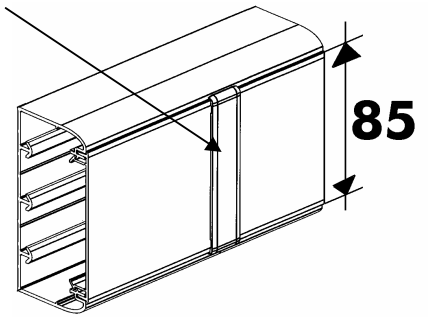

White color RAL 9003

Allows:
- the junction end to end of two covers
- respect of the degree protection
- to improve aesthetics (covering of the cut)

Assembly of the joint by clips

Pack by 10

Assembly of the cover joint by clips of the two parts

References	Covers	Use with ref
0 108 00	40	0 105 20
0 108 01	65	0 105 21
0 108 02	85	0 105 22
0 108 04	130	0 105 24
0 108 06	180	0 105 26

2. FINISHING ACCESSORIES (continued)

2.9 Sockets :

MOSAIC SOCKETS OUTLETS - AUTOMATIC TERMINALS GERMAN STANDARD		Standard	Red	Tamperproof
2P+E, 2 modules		774 01	-	774 21
2 x 2P+E, 4 modules		774 02	774 12	774 22
3 x 2P+E, 6 modules		774 03	774 13	774 23
4 x 2P+E, 8 modules		774 04	-	774 24
MOSAIC SOCKETS OUTLETS - SCREW TERMINALS GERMAN STANDARD				
		Standard	Red	Tamperproof
2P+E, 2 modules		776 01	-	776 21
2 x 2P+E, 4 modules		776 02	776 12	776 22
3 x 2P+E, 6 modules		776 03	776 13	776 23
4 x 2P+E, 8 modules		776 04	-	776 24

3. COMPLEMENTARY ACCESSORIES.

3.1 Height spacer ref 0 105 80

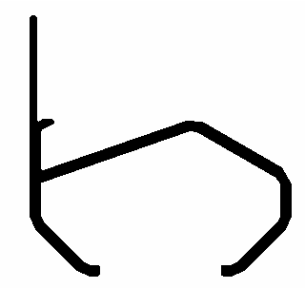

Available in length of 2m, colour: charcoal grey.
Allows to use the trunking on the ground

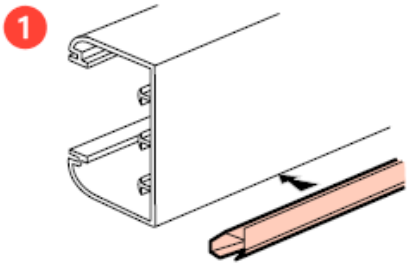

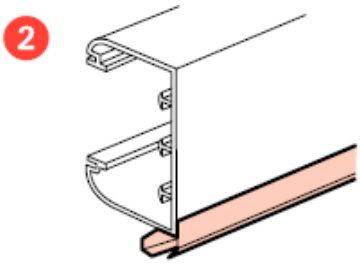

Dimensions.

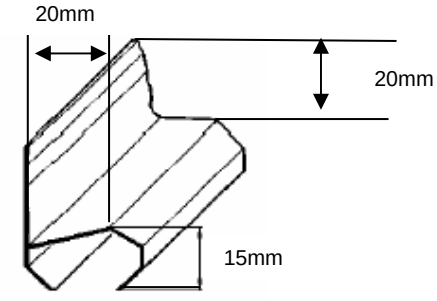

3. COMPLEMENTARY ACCESSORIES (continued)

3.2 Spit end cap ref.0 106 95.

For rapid fixing of the trunking with the Spit Pulsa 700
(use 20mm Spit nails)

The adapter has a shutter making it possible to hide the nail after fixing.
Fixes itself directly on the nose of Spit Pulsa 700.

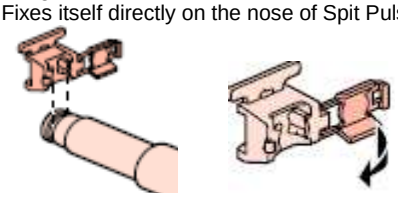

For a perfect centering of the point, to make slip the adapter to the pastille until blocking.

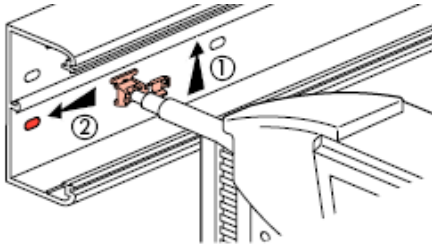

Attention for fixing in height 65mm, it is necessary to incline the Spit Pulsa.

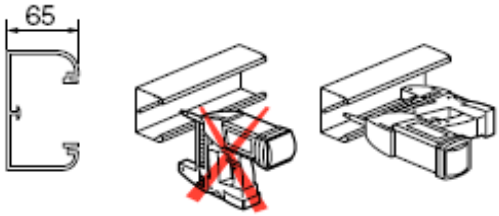

3. COMPLEMENTARY ACCESSORIES (continued)

3.3 Clip ref. 0 106 81/82/86

Ref 0 106 86 Ref 0 106 82 Ref 0 106 81

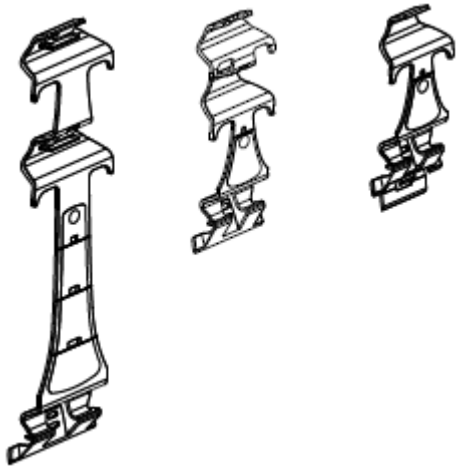

Allows:
- to retain the cables inside the trunking
Assembly of the clip by clips inside the body of the trunking

References	Covers
0 106 81	65mm
0 106 82	40/65/85mm
0 106 86	130/180mm

Grey Colour.

Warning with the use of the ref. 0 106 81:

To use only with the trunking ref. 0 104 24 (it is not possible to cut clip ref. 0 106 82 in position cover 65mm and to assemble it in this one)

The clip maintains the cables in the trunking at the end of the installation

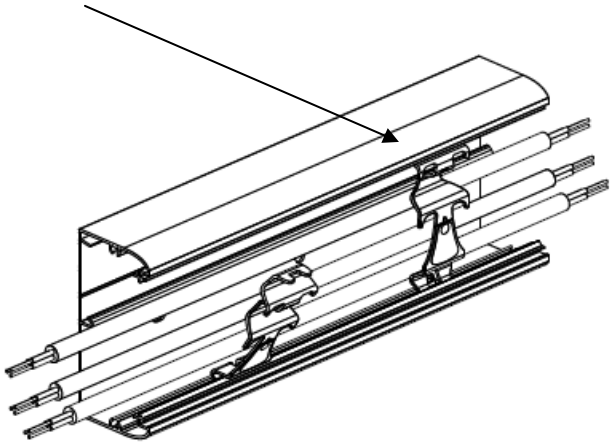

The clip is fixed on the chute making it possible to retain the cables under installation

3. COMPLEMENTARY ACCESSORIES (continued)

3.4 End cap of connection ref. 0 898 07.

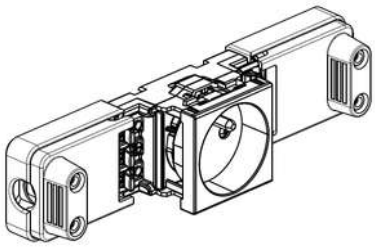

Positions at the end of all the sockets 2P+T with bilateral connection for DLP

Material ABS
Provide the function cable clamp using 2 screws
Ensure the protection of connections

Dimensions :

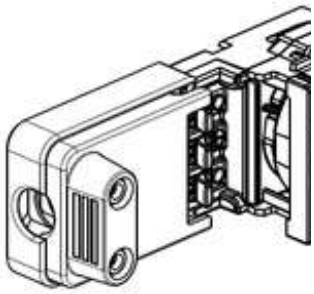

3.5 Base for clamp ref. 0 308 81

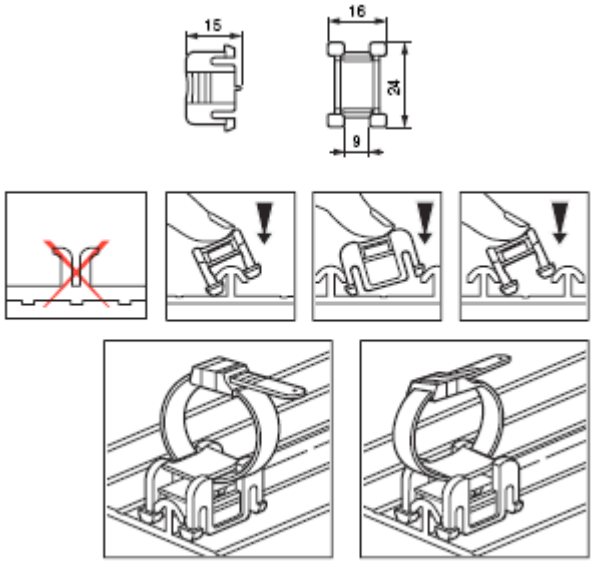

For more information concerning reference 0 308 81, to see data sheet N° F00139FR/07

4. SUPPORTS.

4.1 Supports for Mosaic ref. 0 109 52/54/56/58/92/94/96/98

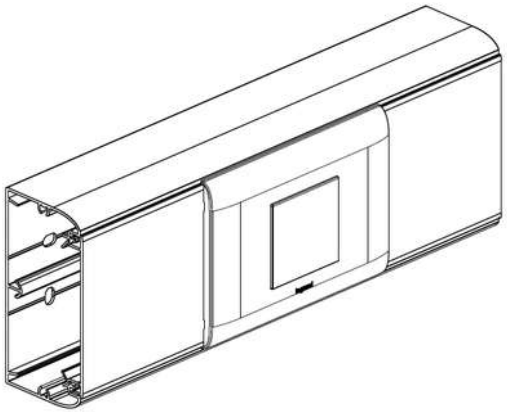

Supports delivered with finishing plate in white colour.

White color RAL 9003

Allows:
the assembly on trunking equipped with lid 65mm or 85mm of Mosaic sockets for trunking of 3/2/4 /6/8 modules.
the assembly of the Mosaic sokets 2 modules French standard in horizontal position and vertical with supports 0 109 52 and 0 109 92 (only horizontal for the other supports)

Use of the Mosaic supports according to the covers of trunking:

	Supp 2 mod.	Supp 4 mod.	Supp 6 mod.	Supp 8 mod.
CV 65mm	0 109 52	0 109 54	0 109 56	0 109 58
CV 85mm	0 109 92	0 109 94	0 109 96	0 109 98

Dimensions :

Thickness plates

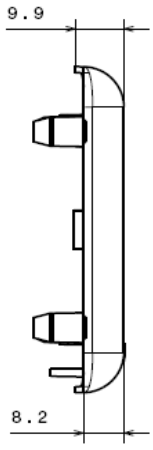

4. SUPPORTS (continued)

4.1 Supports for Mosaic ref. 0 109 52/54/56/58/92/94/96/98

Dimensions :

Plate :

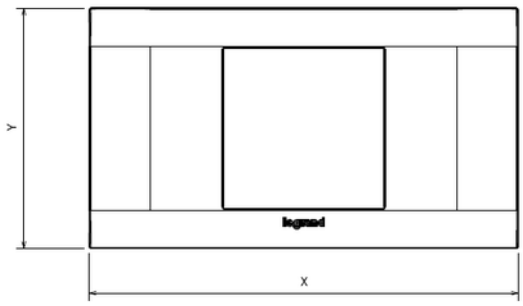

Support :

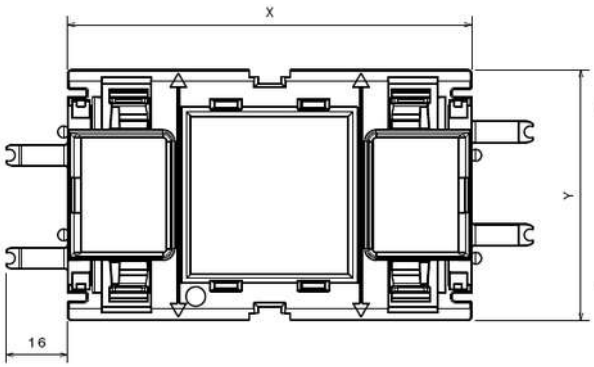

For cover 65mm.

Y (mm) = the plates width 67.5mm, the supports width 64.5mm.

	2 mod. 0 109 52	4 mod. 0 109 54	6 mod. 0 109 56	8 mod. 0 109 58
support X(mm)	104	149.2	194.4	239.6
plate X(mm)	120	165.2	210.4	255.6

For cover 85mm.

Y (mm) = the plates width 90mm, the supports width 87mm.

	2 mod. 0 109 92	4 mod. 0 109 94	6 mod. 0 109 96	8 mod. 0 109 98
support X(mm)	104	149.2	194.4	239.6
plate X(mm)	120	165.2	210.4	255.6

4. SUPPORTS (continued)

4.2 Universal supports ref. 0 109 13/23/33/43/14/24/34/44

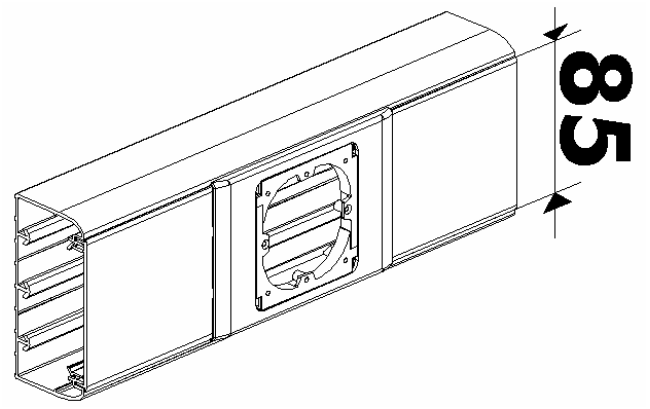

Supports delivered with finishing plate in white colour.

White color RAL 9003
Allows:

- the assembly on trunking equipped with covers 85mm or 130mm of equipment 2/4/6/8 modules Programme Mosaic, Programme Céliane, Programme Plexo or another equipment distance between centres 60mm
- assembly of possible Mosaic equipment on cover 130mm with 0 109 14/24/34/44 + metal support.
- possibility of assembly into vertical with 0 109 13 and 0 109 14.

Use of the Mosaic supports according to the covers of trunking:

	Support 1 poste.	Support 2 postes.	Support 3 postes.	Support 4 postes.
CV 85mm	0 109 13	0 109 23	0 109 33	0 109 43
CV 130mm	0 109 14	0 109 24	0 109 34	0 109 44

Dimensions :

Thickness plates

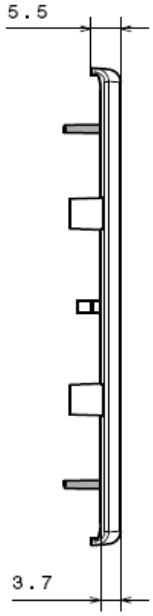

4. SUPPORTS (continued)

4.2 Universal supports ref. 0 109 13/23/33/43/14/24/34/44

Dimensions :

Plate :

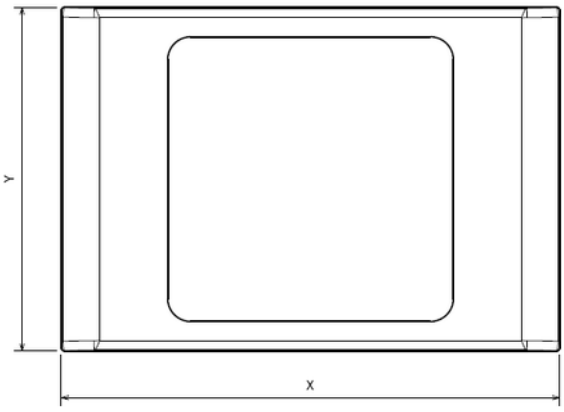

Support :

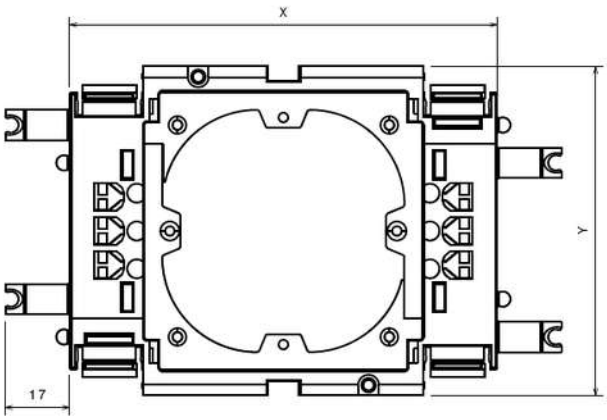

For cover 85mm.

Y (mm) = the plates width 90mm, the supports width 87mm.

	Support 1 poste 0 109 13	Support 2 postes 0 109 23	Support 3 postes 0 109 33	Support 4 postes 0 109 43
X(mm)	130	201	272	343
Y(mm)	113	184	255	326

For cover 130mm.

Y (mm) = the plates width 135mm, the supports width 132mm.

	Support 1 poste 0 109 14	Support 2 postes 0 109 24	Support 3 postes 0 109 34	Support 4 postes 0 109 44
X(mm)	130	201	272	343
Y(mm)	113	184	255	326

4. SUPPORTS (continued)

4.3 Hypra socket support ref. 0 109 00

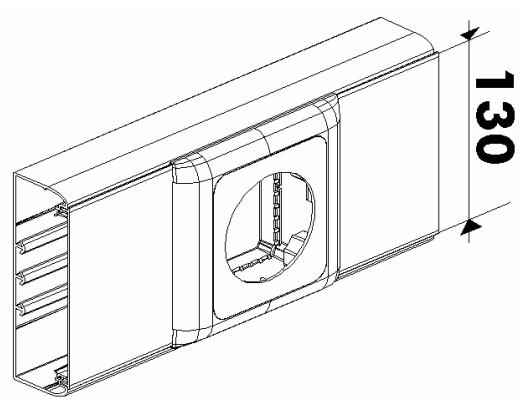

Supports delivered with finishing plate in white colour.
White color RAL 9003

1 industrial support cover 130mm in grey colour.

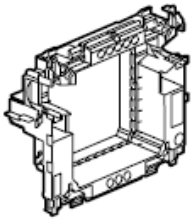

Only for cover 130mm.
Dimensions = support 130mm x 142mm

3 industrial plates in white colour.
(1 plate A diameter 52mm/1 plate B diameter 63mm et 1 plate C diameter 73mm)



4 screw TC diameter 4x20mm
8 screw CS 3x19mm

Allows:
- the assembly on the trunking (equipped with cover 130mm) of the industrial sockets plastic P17 in horizontal position or vertical (see the dimensions of the sockets in the catalog)
- the assembly of the sockets Plexo.
- the assembly of the sockets Plexo 20A/32A IP 44 IK 08.

Dimensions :

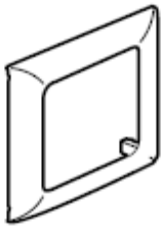

Only for cover 130mm.
Dimensions = cover plate 135mm x 152mm

4. SUPPORTS (continued)

4.3 Hypra socket support ref. 0 109 00

Industrial plates allowing the assembly of support hypra

Plate A diameter 52mm :

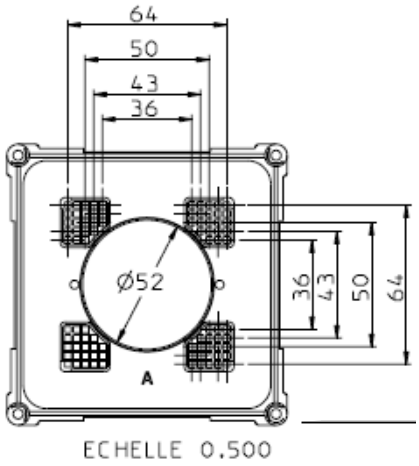

Plate B diameter 63mm

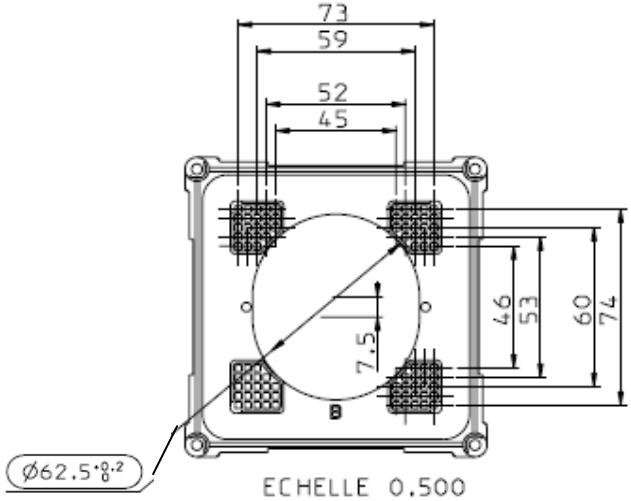

Plate C diameter 73mm

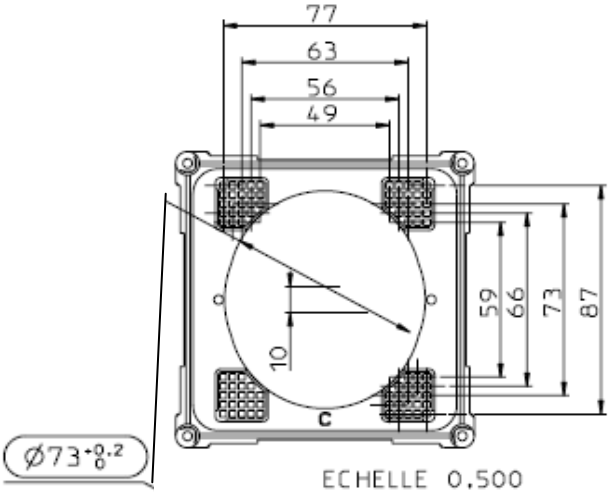

4. SUPPORTS (continued)

4.4 Legrand Lexic support ref. 0 109 05/25/35/65/85.

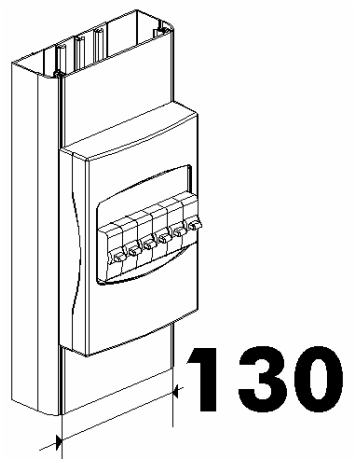

Assembly on trunking into vertical for 0 109 25, 0 109 35 and 0 109 65.

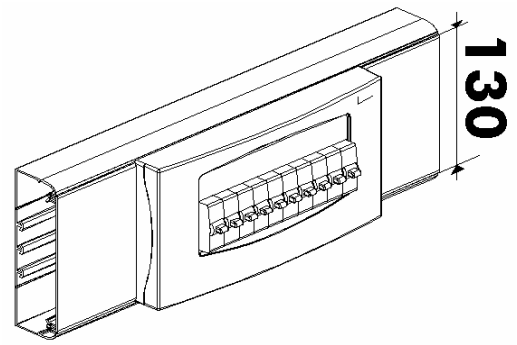

Assembly on trunking into horizontal for 0 109 05/0 109 85.

Supports delivered with finishing plate in white colour

White color RAL 9003

Allows:

- the assembly on trunking equipped with covers 65/85mm or 130mm of Lexic 2/3/6/8/10 modules

	Supp 10 mod.	Supp 2 mod.	Supp 3 mod.	Supp 6 mod.	Supp 8 mod.
CV 65mm	-	10925	-	-	-
CV 85mm	-	-	10935	-	-
CV 130mm	10905	-	-	10965	10985

Dimensions :
H = 35.5mm for the height of the plates
Y = the plates width 131mm

	10 mod. CV 130 10905	2 mod. CV 65 10925	3 mod. CV 85 10935	6 mod. CV 130 10965	8 mod. CV 130 10985
support X(mm)	264	175	175	175	228
plate X(mm)	274	185	185	185	238

4. SUPPORTS (continued)

4.5 Insulation unit ref 0 109 27.

Insulation unit for 2 modules, can be fitted together to create 4, 6 and 8 modules supports

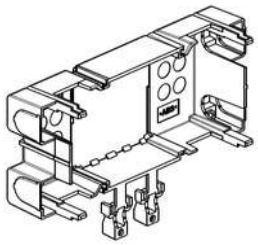

2.7 Insulation unit ref 0 109 17.

Insulation unit for 2 modules, can be fitted together to create 4, 6 and 8 modules supports

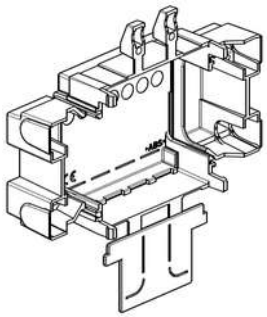

5. ACCESSORIES

5.1 Flat junctions ref. 0 107 31/32/33

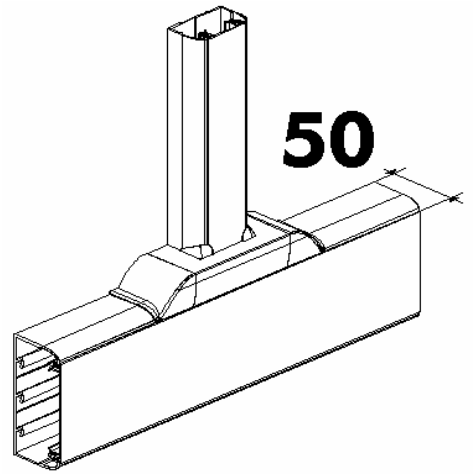

White color RAL 9003

The junction in “T” allows.
- respect of the degree protection
- aesthetics (covering of the cut) improves

Assembly on the body by clip

0 107 31 : For trunking H 35mm to tap-off to a trunking H 35mm
0 107 32 : For trunking H 50mm to tap-off to a trunking H 50mm
0 107 33 : For trunking H 65mm to tap-off to a trunking H 65mm

For ref. 0 107 32/33 and to tap-off to a trunking width superior to 105mm, to use:

2 derivations of body (ex: to derive from a trunking 150x50 to a the same trunking 150x50, to use 2x0 107 32)
3 derivations of body (ex: to derive from a trunking 220x65 to a the same trunking 220x65, to use 3x0 107 33)

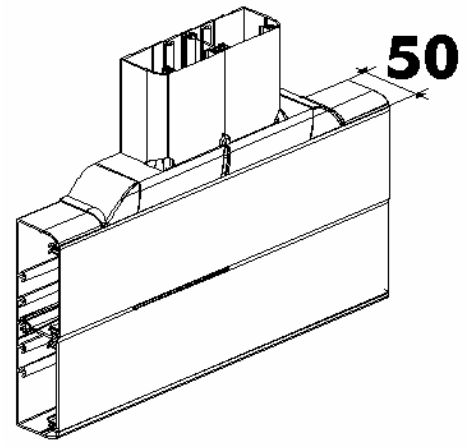

5. ACCESSORIES (continued)

5.2 Complementary for flat junctions ref. 0 107 42/43.

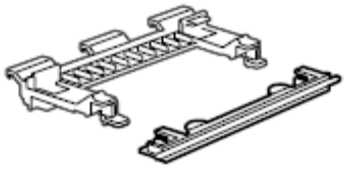

Allow the derivation of the cables since the compartment of the bottom.

0 107 42 for trunking H 50mm.
0 107 43 for trunking H 65mm.

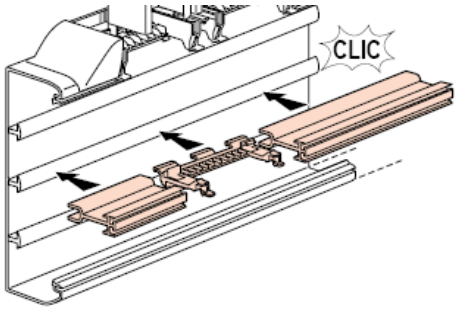

Fix itself directly in the bottom of the trunking (on the “T”) between two pieces of division partition.

5.3 All feedthroughs ref.0 106 98/99.

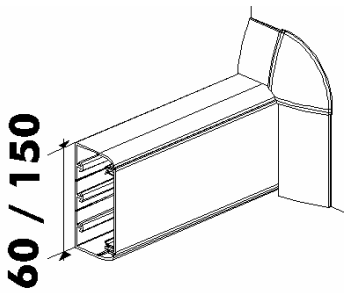

Ref.0 106 98 for trunking 80 to 150mm width

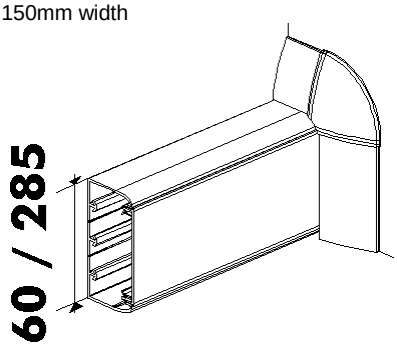

Ref.0 106 99 for trunking 195 to 220mm width.

Provide a finish between the trunking and the wall
- aesthetics improve (covering of the cut of the wall)
- assembly on the body by clipsage.

White color RAL 9003

5. ACCESSORIES (continued)

5.4 Change of capacity ref. 0 106 87/88/89

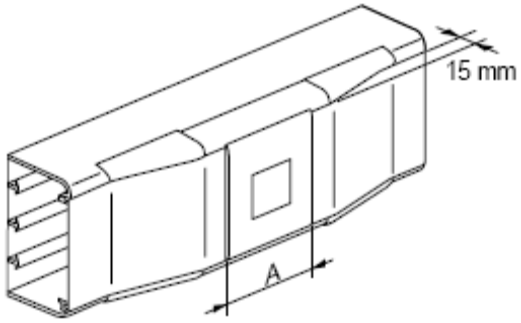

Allows to increase 15mm the height of a trunking to preserve the space of wiring with a flat junction or a support equipment.
Accessory of change of capacity: still more flexibility.
Respect of the index of protection.
Improve aesthetics (covering of the cut)
Assembly on the body of the trunking by clip

White color RAL 9003

0 106 87: Raise, length 57cm.



0 106 88: Set of 4 accessories to change of capacity of the body

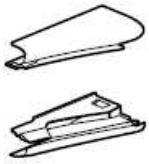

0 106 89: Set of 2 accessories of change height of partition (to be used only on trunking with multi-compartments)

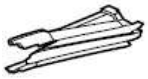

5. ACCESSORIES (continued)

5.4 Change of capacity ref. 0 106 87/88/89 (suite)

- fix the rise on the trunking

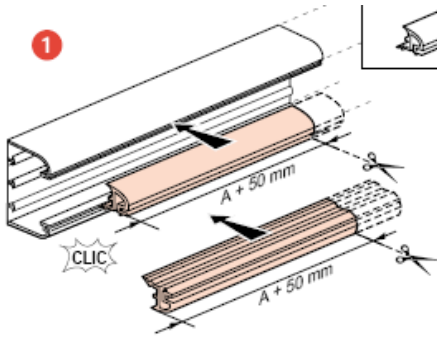

2- install at the end of raise the accessories of change of capacity

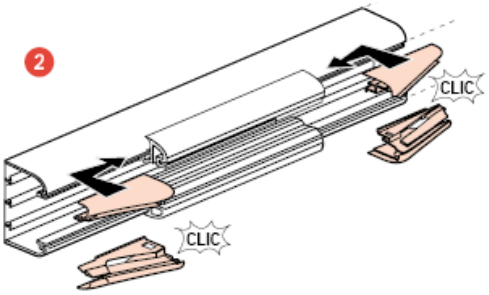

3- pose the support

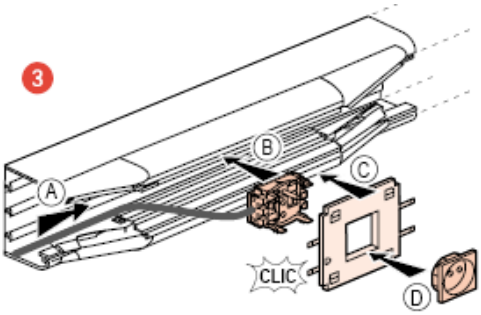

4- clip the cover and the finishing plate on the support

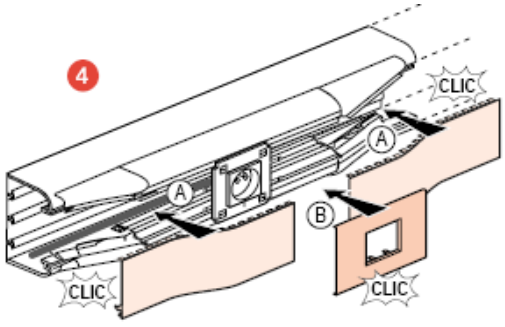

5. ACCESSORIES (continued)

5.5 For wiring VDI ref. 0 107 80/81/82/83

Come in complement from the element from standard advance. Fix themselves in any evolutionary chute (except for the 35x80 in which one cannot fix the accessory and in the compartments using a cover 40)

References	Section mm²	Diameter maxi
0 107 80	580	17
0 107 81	580	17
0 107 82	1120	3x17
0 107 83	490	2x13.5

0 107 80: Accessory for internal angle

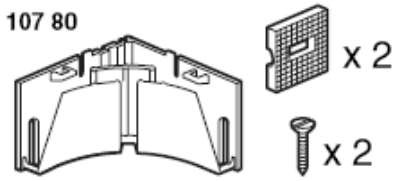

Delivered with supports for fixing on the bottom of the trunking (on the “T”) and 2 screws

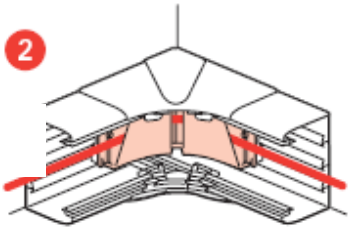

0 107 81: Accessory for external angle

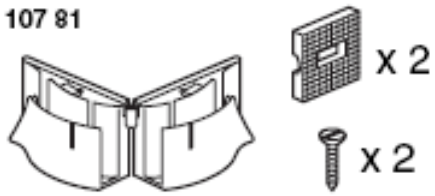

Delivered with supports for fixing on the bottom of the trunking (on the “T”) and 2 screws

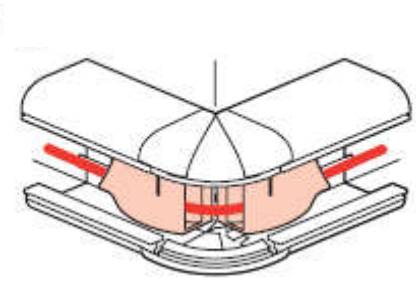

5. ACCESSORIES (continued)

5.5 For wiring VDI ref. 0 107 80/81/82/83 (continued)

0 107 82: Accessory for flat angle

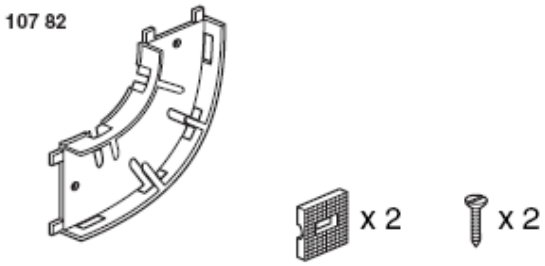

Delivered with supports for fixing on the bottom of the trunking (on the “T”) and 2 screws

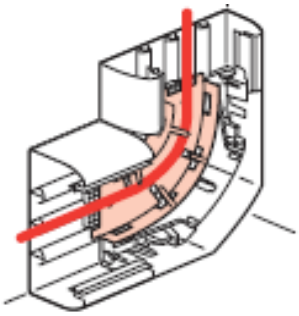

0 107 83: Accessory for flat junction

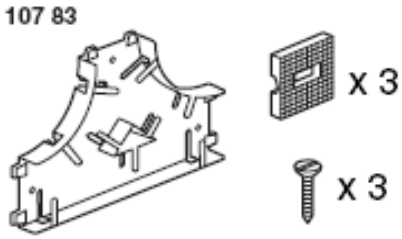

Delivered with supports for fixing on the bottom of the trunking (on the “T”) and 3 screws

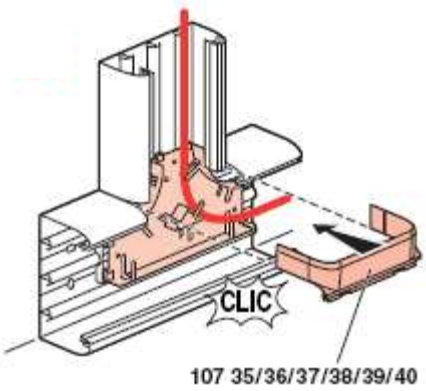

5. ACCESSORIES (continued)

5.6 Junction for change of plane réf : 0 107 70/71/72/73/74.

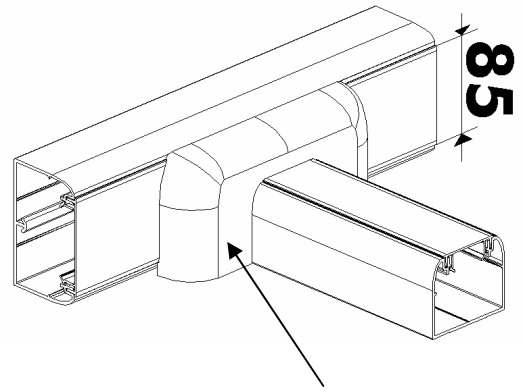

107 70/71/72/73/74

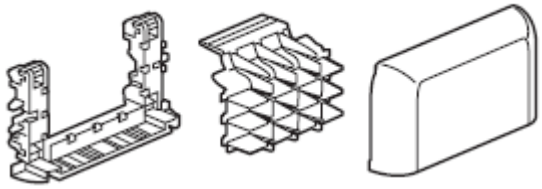

To tap-off from wall to ceiling for example to supply power to a luminaire.
Respect of the index of protection.
Improve aesthetics (covering of the cut)
Assembly on the body of the trunking by clips

White color RAL 9003

Table of derivations for change of plane to be used with:

References	To use for
0 107 70	Covers 40mm
0 107 71	Covers 65mm
0 107 72	Covers 85mm
0 107 73	Trunking ref . 0 104 24 only
0 107 74	Covers 130mm

Assembly on the ground in derivation starting from a trunking DLP to a floor duct

Assembly with the ceiling in derivation starting from a trunking DLP to a mini-trunking

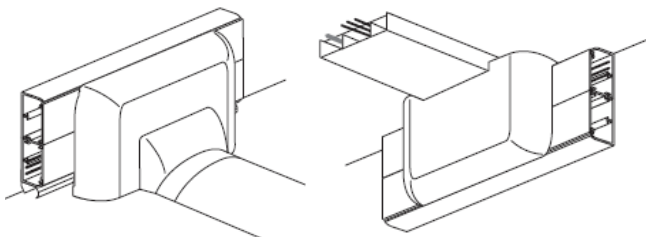

5. ACCESSORIES (continued)

5.7 Derivations for floor duct ref. 0 106 90.

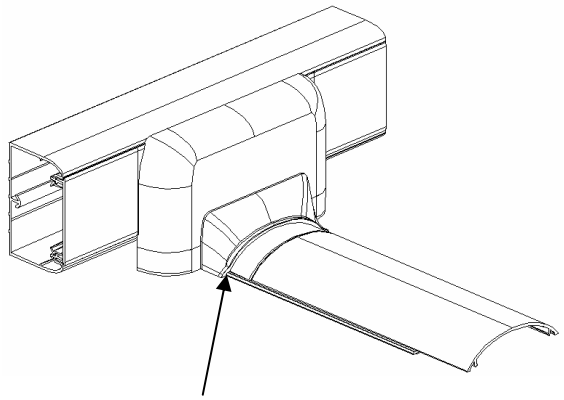

106 90

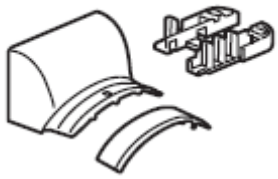

Allows to tap-off on a floor duct ref. 0 328 00.
Respect of the index of protection.
Improve aesthetics (covering of the cut)
Assembly on the body of the trunking by clips

White color RAL 9003

Table of derivations for floor duct to be used with:
(must join the ref. 0 106 90: DLP complement floor duct in white colour)

References	To use for
0 107 70+0 106 90	Covers 40mm
0 107 71/73+0 106 90	Covers 65mm
0 107 72+0 106 90	Covers 85mm
0 107 74+0 106 90	Covers 130mm

No derivation for floor duct for reference 0 104 24 (trunking 105x50 with cover 65mm)

6. TECHNICAL CHARACTERISTICS (continued)

Classification for DLP PVC trunking standard EN 50085-2-1.

6.2 Resistance to impact for installation and application	2.0J
6.3 Minimum storage and transport temperature	- 25°C
6.3 Minimum installation and application temperature	- 5°C
6.3 Maximum application temperature	+ 60°C
6.4 Resistance to flame propagation	Non-flame propagating
6.5 Electrical continuity characteristic	Without electrical continuity characteristic
6.6 Electrical insulating characteristic	With electrical insulating characteristic
6.7 Degrees of protection provided by enclosure	IP40
6.9 The system access cover retention	With a tool
6.101 The position when surface mounted	Wall fixed Celling fixed Wall fixed and supported by the floor or orther horizontal surface
6.102 The functions provided	Type 2 for distribution trunking Type 3 for installation trunking
Rated current	500 V
Protection against mechanical shocks	IK 07

Composition and functions of fully assembled DLP trunking

Trunking			Trunking and accessories					Angles				Flat junction(3)		Supports for wiring accessories	Cross-section (mm²)
Number of compartments	Covers width (mm)	Dim. (mm)	Bodies	Covers	Division partitions(2)	Separation partitions(2)	Base joints(2)	End cap(2)	Internal angle(1)	External angle(1)	Flat angle(1)	To width 80 mm(3)	To width 105 mm(3)		
1	65	50 x 80	104 62 (body and cover complete)		105 82	-	106 92 or 106 91	107 22	106 02	106 22	107 67	107 35	-	(3)	3340
	65	50 x 105	104 24 (body and cover complete)		105 82	-	106 96	107 00	106 05	106 19	107 86	107 39	107 40	(3)	4380
2	65 65	50 x 150	104 27 (body and cover complete)		105 82	-	106 92 or 106 91	107 03	106 06	106 35	107 89	107 35	107 36 107 37	(3)	3060/3060
3	40 65 40	50 x 170	104 67 (body and cover complete)		105 82	-	106 92 or 106 91	107 10	106 50	106 38	107 98	107 35	107 36 107 37	(3)	2 x 2050/2770
Composition and functions of adaptable DLP trunking															
1	65	35 X 80	104 11	105 21	-	105 84	106 92 or 106 91	107 22	106 01	106 21	107 67	107 35	-	(3)	2240
	85	35 X 105	104 21	105 22	-	105 82	106 92 or 106 91	107 01	106 01	106 21	107 84	107 35	107 36	(4)	2850
	65	50 X 80	104 12	105 21	-	105 82	106 92 or 106 91	107 22	106 02	106 22	107 67	107 35	-	(3)	3340
	85	50 X 105	104 22	105 22	-	105 82	106 92 or 106 91	107 02	106 02	106 22	107 85	107 35	107 36 107 37	(4)	4300
	85	65 X 105	104 23	105 22	-	105 83	106 92 or 106 91	107 04	106 03	106 23	107 87	107 33	107 38	(4)	5740
	130	50 X 150	104 32	105 24	-	105 82	106 92 or 106 91	107 03	106 02	106 22	107 89	107 35	107 36 107 37	Distribution	6440
	130	65 X 150	104 33	105 24	-	105 83	106 92 or 106 91	107 06	106 03	106 23	107 90	107 33		Distribution	8200
	180	50 X 195	104 52	105 26	-	105 82	106 92 or 106 91	107 07	106 02	106 22	107 92	107 35	107 36 + 107 37	Distribution	8460
	180	65 X 195	104 53	105 26	-	105 83	106 92 or 106 91	107 07	106 03	106 23	107 93	107 33	107 38	Distribution	11240
2	65 65	65 X 150	104 33	2 x 105 21	104 73	105 83	106 92 or 106 91	107 06	106 07	106 36	107 90	107 33	107 38	(3)	3960/3960
	85 85	50 X 195	104 52	2 x 105 22	104 72	105 82	106 92 or 106 91	107 07	106 06	106 35	107 92	107 35	107 36 + 107 37	(4)	3940/3940
	85 85	65 X 195	104 53	2 x 105 22	104 73	105 83	106 92 or 106 91	107 07	106 07	106 36	107 93	107 33	107 38	(4)	5310/5310
	65 130	65 X 220	104 59	105 24 + 105 21	104 73	105 83	106 92 or 106 91	107 08	106 07	106 36	107 96	107 33	107 38	(3)	3960/8010

6. TECHNICAL CHARACTERISTICS (continued)

Thickness about boby DLP PVC :

Cp60x35	bottom 1.6mm / sides 1.6mm
Cp60x50	bottom 1.9mm / sides 1.9mm
Cp80x35	bottom 1.6mm / sides 1.6mm
Cp80x50	bottom 1.9mm / sides 1.9mm
Cp105x35	bottom 1.6mm / sides 1.6mm
Cp80x65	bottom 2.4mm / sides 2.4mm
Cp105x50cv65	bottom 1.9mm / sides 1.9mm
Cp105x50cv85	bottom 1.9mm / sides 1.9mm
Cp105x65	bottom 2.4mm / sides 2.4mm
Cp150x50	bottom 1.9mm / sides 1.9mm
Cp170x50	bottom 1.9mm / sides 1.9mm
Cp150x65	bottom 2.6mm / sides 2.6mm
Cp195x50	bottom 1.9mm / sides 1.9mm
Cp195x65	bottom 2.6mm / sides 2.6mm
Cp220x50	bottom 1.9mm / sides 1.9mm
Cp220x65	bottom 2.6mm / sides 2.6mm

7. MATERIAL CHARACTERISTICS.

The trunkings, covers and partitions are in PVC white RAL 9003.

Plastic accessories:

The accessories are in plastic ABS or PVC white RAL 9003