B16

Ø 16 mm • 0.06 Nm

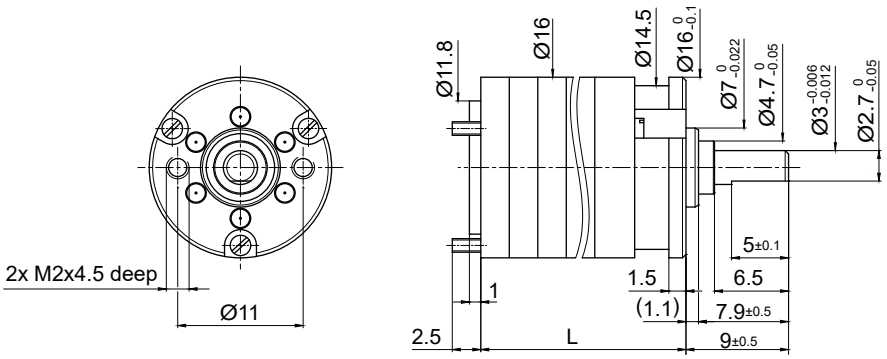

Dimensions in mm.

Ratio		5	9	15	27	45	81	135	141	243	405	729	1215	2187
1	Number of Gear Stages	2	2	3	3	4	4	5	5	5	6	6	7	7
2	Direction of Rotation	=	=	≠	≠	=	=	≠	≠	≠	=	=	≠	≠
3	Efficiency	0.81	0.81	0.73	0.73	0.65	0.65	0.59	0.59	0.59	0.53	0.53	0.48	0.48
4	L (mm)	10.5	10.5	13	13	15.5	15.5	18	18	18	20.5	20.5	23	23
5	Weight g	7	7	8	8	9	9	10	10	10	11	11	12	12
	(oz)	(0.246)	(0.246)	(0.282)	(0.282)	(0.317)	(0.317)	(0.352)	(0.352)	(0.352)	(0.388)	(0.388)	(0.423)	(0.423)
6	**Available with Motor – L2 - Length with motor (mm)**													
	16C18	29.2	29.2	31.7	31.7	34.2	34.2	36.7	36.7	36.7	39.2	39.2	41.7	41.7
	16N78	41.5	41.5	44	44	46.5	46.5	49	49	49	51.5	51.5	54	54
	16G88	41.5	41.5	44	44	46.5	46.5	49	49	49	51.5	51.5	54	54
	17S78	32.2	32.2	34.7	34.7	37.2	37.2	39.7	39.7	39.7	42.2	42.2	44.7	44.7
	17N78	39.4	39.4	41.9	41.9	44.4	44.4	47.9	47.9	47.9	49.4	49.4	51.9	51.9
	P110	29.5	29.5	32	32	34.5	34.5	37	37	37	39.5	39.5	42	42
	16DCP/16DCT/17DCT CB	39.5	39.5	42	42	44.5	44.5	47	47	47	49.5	49.5	52	52
	16DCP/16DCT/17DCT PM	39	39	41.5	41.5	44	44	46.5	46.5	46.5	49	49	51.5	51.5

Characteristics		5	B16 • 0 • ····	B16 2R • 0 • ····
7	Shaft Bearings		Sleeve	Ball Bearing
8	Maximum Static Torque	Nm (oz-in)	0.3 (42)	0.3 (42)
9	Maximum Radial Force			
	@ 8mm from mounting face	N (lb)	5 (1.1)	10 (2.2)
10	Maximum Axial Force	N (lb)	5 (1.1)	10 (2.2)
11	Maximum Press Fit Force	N (lb)	100 (23)	100 (23)
12	Average Backlash @ no-load		1.5°	1.5°
13	Average Backlash @ 0.3 Nm		3°	3°
	Shaft Play:			
14	-radial	µm	≤ 20	≤ 10
15	-axial	µm	50-150	≤ 100
16	Maximum Recommended Input Speed	rpm	8000	8000
17	Operating Temperature Range:	°C (°F)	-30 to +65 (-22 to +150)	

Motor + Gearbox = L2

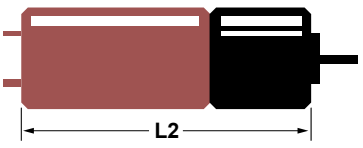

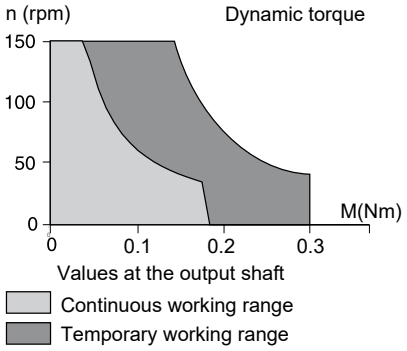

V012021 • © 2021 Portescap. Specifications subject to change without notice.