5000 series

Toggle switches

Distinctive features

UG1006-A

THE WIDEST RANGE IN MINIATURE SWITCHES

A



- 17 actuators including toggles, paddle levers and locking levers in different lengths.
- 5 contact materials from dry circuit to 6A 125VAC and high inrush up to 120A 2 ms.
- 8 functions including maintained and momentary versions.
- 1 to 4 pole configurations.



- 12 terminal types including 9 for PC board mounting. Other types include quick-connect and wire-wrap.
- 6 bushing styles from 6 (.236) plain to 11,9 (15/32) threaded.
- 3 types of finish including military black.



- 4 approvals (UL - CSA - VDE - CECC) and 3 listings.
- 4 types of sealing for terminal or front panel requirements.
- Numerous accessories available for actuator and bushing options.

ELECTRICAL SPECIFICATIONS

- Current/voltage rating with resistive load :

Contact	Maximum	Minimum	Level*
Silver (A)	3A 250VAC - 6A 125VAC - 4A 30VDC	50mA 10VDC	III and IV
Silver, gold plated (AD)	3A 250VAC - 6A 125 VAC - 4A 30VDC Gold plating withstands up to 100mA 30VDC	10mA 50mV 10µA 5V	I to IV
Brass, gold plated (CD)	0,4 VA at 20VAC or DC	10mA 50mV 10µA 5V	I and II

- For inductive, lamp or capacitive load, consult factory.
- Initial contact resistance : 10 mΩ max.
- Insulation resistance : 1.000 MΩ min. at 500VDC
- Dielectric strength :
  1.000 Vrms 50 Hz min. between terminals
  1.500 Vrms 50 Hz min. between poles
  1.500 Vrms 50 Hz min. between terminals and frame
- Contact bounce : 2 ms max.
- Electrical life at full load :
  50.000 cycles for single and double pole
  40.000 cycles for 3 pole
  30.000 cycles for 4 pole
- Low level or mechanical life : 100.000 cycles

* For details, see Technical Information, end of catalogue.

MATERIALS

- Case : diallylphthalate (DAP) or high temperature plastic material (UL94-V0)
- Actuator : brass, nickel plated
- Paddles : UL94HB polyamide
- Lever caps : vinyl
- Bushing : brass, nickel plated
- Housing : stainless steel or steel tin plated
- Contacts
  A : silver
  AD : silver, gold plated
  CD : brass, gold plated
  X814 : for peak currrents, see "Special options".
- Terminal seal : epoxy

GENERAL SPECIFICATIONS

- Torque : 1,25 Nm (.922 Ft.lb) max. applied to nut
- Panel thickness : 2,5 mm (.098) with 2 nuts - 4 mm (.157) with 1 nut
- Operating temperature : -40°C to +85°C

AGENCY APPROVALS/PREFERENTIAL LIST

EN 61058-1

CECC 96201-007

For VDE, refer to 55000 series.

NATO

Availability : consult factory for details of approved models.

Marking : to order switches marked UL, CSA or CECC, complete appropriate box of ordering format. The preferential list does not appear on the switches.

5000 series

Toggle switches

Overview

MODEL STRUCTURE

A

5							

SERIES

Number of poles

3	Single pole
4	Double pole
5	Three pole
6	Four pole

Terminals and bushing

0	Straight PC terminals, 5,08 (.200) terminal spacing, **with Ø 6,35 (1/4)** threaded bushing
1	Straight PC or quick-connect terminals, 4,70 (.185) terminal spacing, **with Ø 6** (.236) threaded bushing.
2	Straight PC terminals, 4,70 (.185) terminal spacing, right angle, quick-connect or wire wrap terminals, **with 6,35 (1/4)** threaded bushing
3	Straight PC terminals, 4 (.157) terminal spacing, **with Ø 6** (.236) threaded bushing
4	Straight PC terminals, 4 (.157) terminal spacing or right angle terminals , **with Ø 6,35 (1/4)** threaded bushing
5	Solder lug terminals, **with Ø 6 (.236)** threaded bushing.
6	Solder lug terminals, **with Ø 6,35 (1/4) or Ø 11,9 (15/32)** threaded bushing.
7	Solder lug terminals, with Ø 6,35 (1/4) **flatted** bushing.
9	Straight PC or quick-connect terminals, with Ø 6,35 (1/4) **flatted** bushing, 4,70 (.185) terminal spacing.

Terminals

Blank	Solder lugs or straight PC depending on model
M	Solder lugs with Ø 11,9 (15/32) bushing (5600 switches)
MIWR	Wire wrap (for 5200 switches only)
W	Right angle, horizontal mounting (5200 - 5400 switches)
WW	Right angle, vertical mounting (5200 - 5400 switches)
Y] Y4] Y6] Y7]	Bracket mounting (5200 switches)
Z	Quick connect (5200 - 5100 - 5900 switches)

Electrical functions

6	ON	-	ON
9	ON	OFF	ON
7	MOM	OFF	MOM
8	ON	OFF	MOM
2	ON	-	MOM
4	ON	ON	ON
	ON	ON	MOM ▲
	MOM	ON	MOM ▲

Function 4
Must not have blank in "connections" box.
. ▲ Must not have blank in "momentary" box.

Connections for function 4

TH	Standard
CT	Reversed

See wiring diagrams end of catalogue.
. For functions 4, 4-1R, 4-2R (leave blank for all other functions).

Momentary for function 4

1R	ON	ON	MOM
2R	MOM	ON	MOM

Leave blank for other functions.

ABOUT THIS SERIES
On the following pages, you will find successively :
- model structure of switches with threaded bushing
- model structure of switches with plain bushing
- options in the same order as in above chart

Dimensions : first dimensions are in mm while inches are shown as bracketted numbers.

NOTICE : please note that not all combinations of above numbers are available.
Refer to the following pages for further information.

Finish

Blank Bright chrome finish
G Matt black finish on bushing, actuator and hardware.

Fluorescent tip

Blank None
038 White fluorescent tip to lever

Available with matt black finish (G) only.

Special options

Blank No special requirement
X408 Front panel sealing by two O-rings
X404 Horizontal right angle with reduced overall dimensions

Other : specific bushing height, PC terminal length, finish, ratings, etc... See following pages.

Caps and paddles

Caps	Length
U270	11 (.433)
U1710	7,3 (.287)
Paddles	
U240N	12,4 (.488)
U290N	20 (.787)
U390N	21,5 (.846)

Contact materials

A Silver
AD Silver, gold plated
CD Brass, gold plated

For peak currents, see X814, under Special Options.

Sealing

Blank No sealing except where standard
B Epoxy sealed terminals
K Front panel sealing by one O-ring and sealing washer

Sealing by two O-rings, see X408 under "Special options".

Levers

Length with	threaded bushing	plain bushing
Blank (std)	10,5 (.413)	13,5 (.531)
-2	16 (.629)	19 (.748)
-7	-	6,6 (.259)
-8 (flat)	21,3 (.838)	-
-9 (flat)	11,4 (.448)	-
-12 (flat)	6,3 (.248)	-
-16	5,5 (.216)	8,5 (.334)
-17	7 (.275)	10 (.393)
-21 (+ U640) insulated	21,3 (.838)	-
-22	21,3 (.838)	-
-23	14 (.551)	-
Blank (large)	17,5 (.688)	-
-25	16,30 (.642)	
-27 (large)	11,7 (.460)	-
-4N	9 (.354)	12 (.472)

4N for use with paddle actuators only.

Locking levers

-1V 1 locked position
-2V 2 locked positions
-3V 3 locked positions

Other, consult factory.
For models with Ø 6,35 (1/4) bushing.

Approvals

VDE
UL
CSA
CECC

Availability :
Consult factory for details of approved models.

Sealing boots are available. They are presented in section H.

Mounting accessories : standard hardware supplied with all models with Ø 6,35 (1/4) or Ø 6 (.236) threaded bushing : 2 hex nuts 8 mm (.314) across flats, 1 locking ring and 1 lockwasher.
Standard and special hardware available are presented in section I.

Packaging unit : 25 pieces or 50 pieces depending on models.

5000 series

Toggle switches - solder lug terminals

Threaded bushing Ø 6,35 (1/4) : 5600

MODEL STRUCTURE

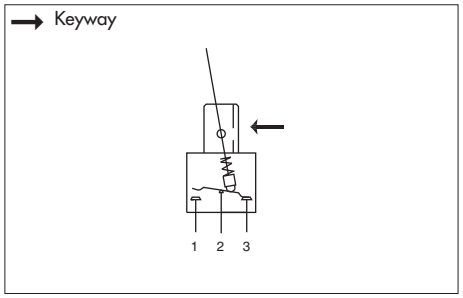

- 1, 2, 3 and 4 pole configurations

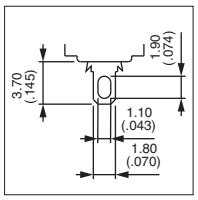

A

MODEL STRUCTURE

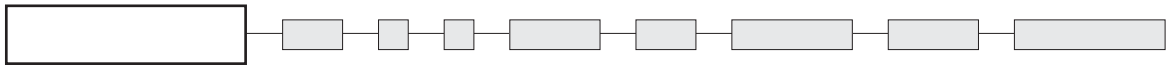

Shown with standard lever

Single pole



	III	II	I
	2-3		1-2
5636	ON	-	ON
5639	ON	OFF	ON
5637	MOM	OFF	MOM
5638	ON	OFF	MOM
5632	ON	-	MOM

Keyway

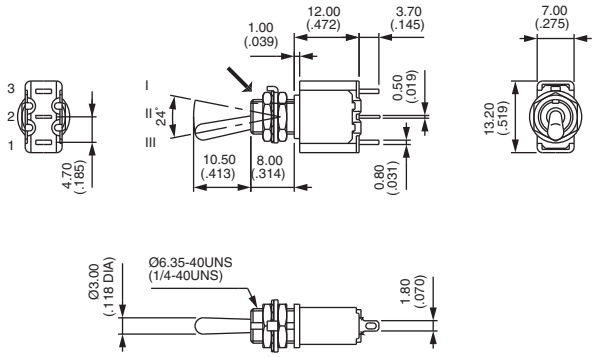

Double pole



	III	II	I
	2-3		1-2
	5-6		4-5
5646	ON	-	ON
5649	ON	OFF	ON
5647	MOM	OFF	MOM
5648	ON	OFF	MOM
5642	ON	-	MOM
5644*	ON	ON	ON
5644 1R*	ON	ON	MOM
5644 2R*	MOM	ON	MOM

Keyway

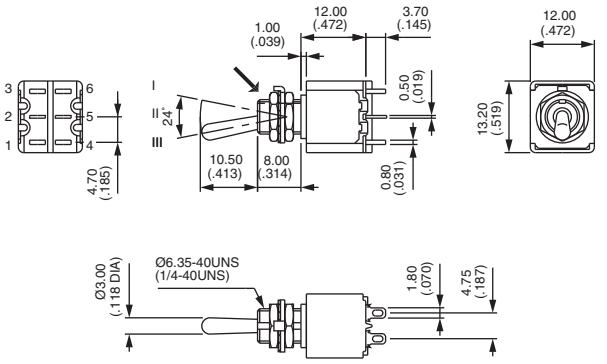

* Function 4 : SP in DP case - specify CT or TH connections, see end of catalogue.

Three pole



	III	II	I
	2-3		1-2
	5-6		4-5
	8-9		7-8
5656	ON	-	ON
5659	ON	OFF	ON
5657	MOM	OFF	MOM
5658	ON	OFF	MOM
5652	ON	-	MOM

Keyway

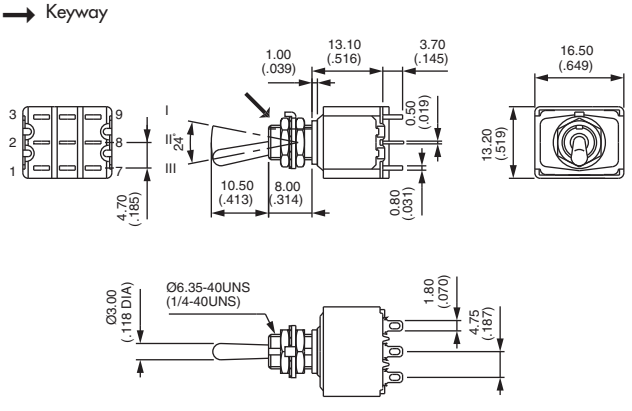

5000 series

Toggle switches - solder lug terminals

Threaded bushing Ø 6,35 (1/4) : 5600

Four pole



	III	II	I
	2-3		1-2
	5-6		4-5
	8-9		7-8
	11-12		10-11
5666	ON	-	ON
5669	ON	OFF	ON
5667	MOM	OFF	MOM
5668	ON	OFF	MOM
5662	ON	-	MOM
5664*	ON	ON	ON
5664 1R*	ON	ON	MOM
5664 2R*	MOM	ON	MOM

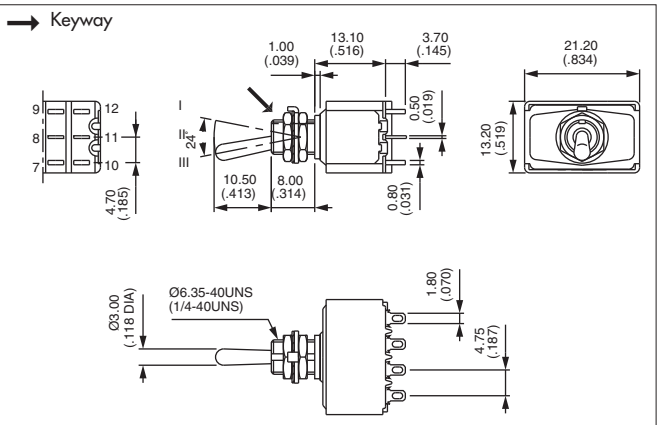

*Function 4 : DP in 4P case - specify CT or TH connections, see end of catalogue.

PANEL CUT-OUT

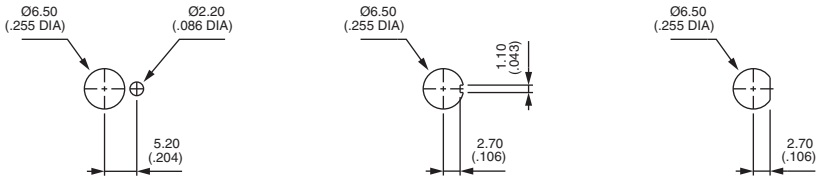

Standard

With **K** sealing option

With **X408** sealing option

A

Diagram as per 5600 model

5700 models

- **Flatted bushing Ø 6,35 mm (1/4)**
- 1, 2, 3 and 4 pole configurations

MODEL STRUCTURE

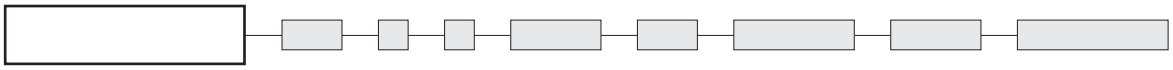

For model structure numbers, refer to **5600** models and replace 6 with 7.

PANEL CUT-OUT

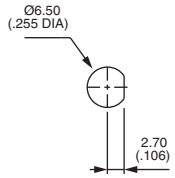

Standard or
with **K** sealing option

Diagram as per 5600 model

5500 models

- **Threaded bushing Ø 6 mm x 0.75 SI (.236 x 0.75 IS)**
- 1, 2, 3 and 4 pole configurations

MODEL STRUCTURE

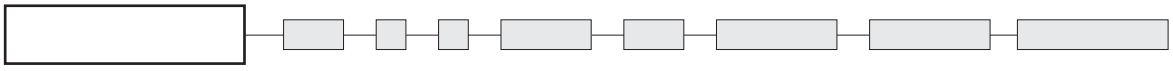

For model structure numbers, refer to **5600** models and replace 6 with 5.

PANEL CUT-OUT

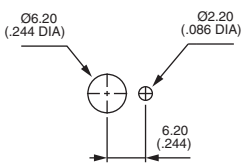

Standard

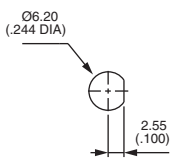

With **X408** sealing option

MODEL STRUCTURE

5000 series

Toggle switches - solder lug terminals

Threaded bushing Ø 11,9 (15/32) : 5600M

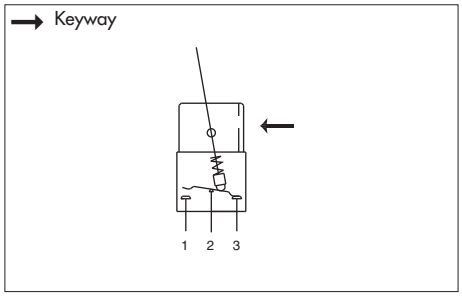

- 1, 2, 3 and 4 pole configurations
- Supplied with 2 hex nuts and 1 locking ring
- Panel thickness up to 6 mm (.236)

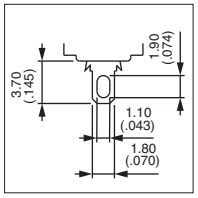

A

MODEL STRUCTURE

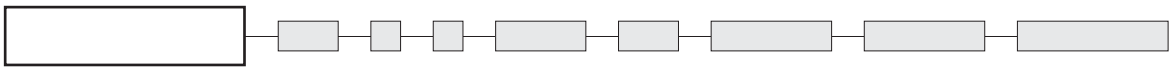

Shown with standard lever

Single pole



	III	II	I
	2-3		1-2
5636M	ON	-	ON
5639M	ON	OFF	ON
5637M	MOM	OFF	MOM
5638M	ON	OFF	MOM
5632M	ON	-	MOM

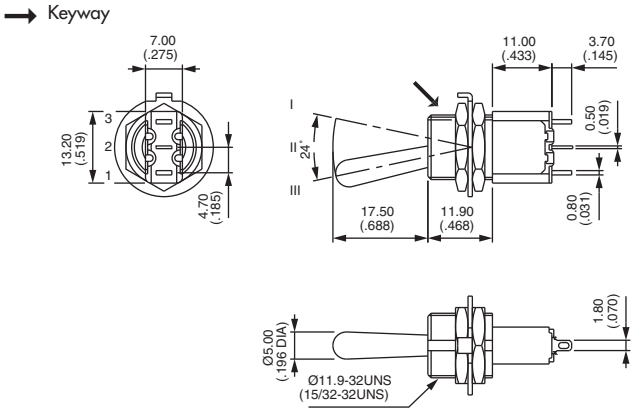

Double pole



	III	II	I
	2-3		1-2
	5-6		4-5
5646M	ON	-	ON
5649M	ON	OFF	ON
5647M	MOM	OFF	MOM
5648M	ON	OFF	MOM
5642M	ON	-	MOM
5644M*	ON	ON	ON
5644M 1R*	ON	ON	MOM
5644M 2R*	MOM	ON	MOM

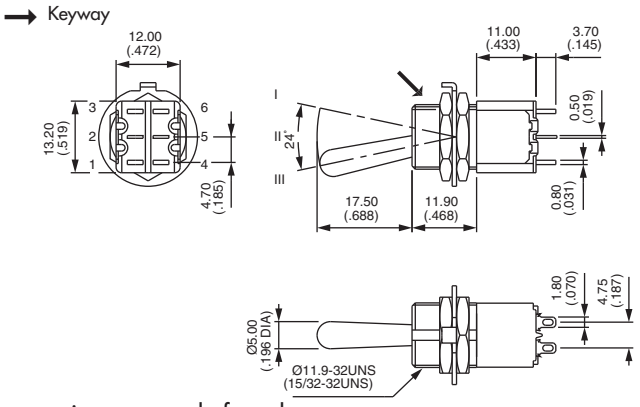

* Function 4 : SP in DP case - specify CT or TH connections, see end of catalogue.

Three pole



	III	II	I
	2-3		1-2
	5-6		4-5
	8-9		7-8
5656M	ON	-	ON
5659M	ON	OFF	ON
5657M	MOM	OFF	MOM
5658M	ON	OFF	MOM
5652M	ON	-	MOM

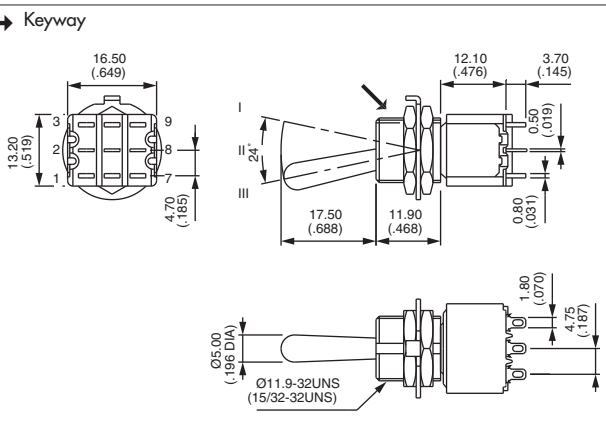

5000 series

Toggle switches - solder lug terminals

Threaded bushing Ø 11,9 (15/32) : 5600M

MODEL STRUCTURE

A

Four pole



	III	II	I
	2-3		1-2
	5-6		4-5
	8-9		7-8
	11-12		10-11
5666M	ON	-	ON
5669M	ON	OFF	ON
5667M	MOM	OFF	MOM
5668M	ON	OFF	MOM
5662M	ON	-	MOM
5664M*	ON	ON	ON
5664M 1R*	ON	ON	MOM
5664M 2R*	MOM	ON	MOM

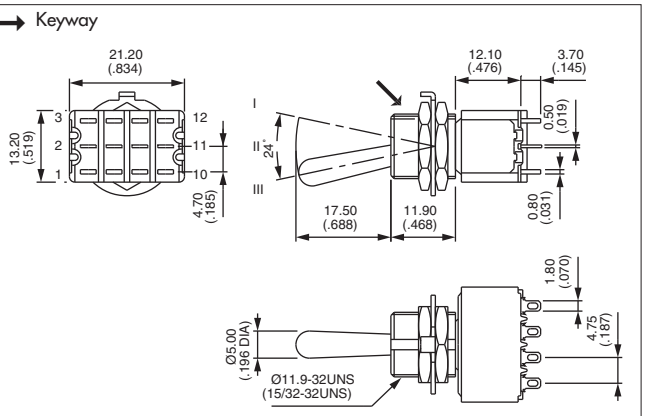

*Function 4 : DP in 4P case - specify CT or TH connections, see end of catalogue.

PANEL CUT-OUT

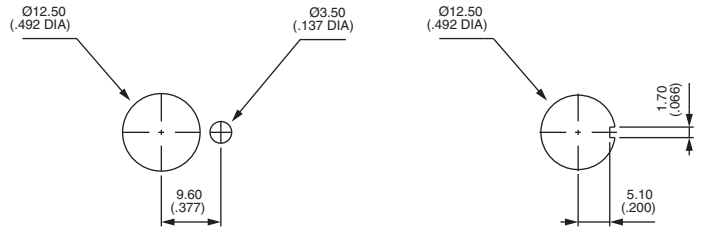

OTHER : M bushing can be combined with other types such as : 5200, Z, MIWR... Consult factory.

MODEL STRUCTURE

5000 series

Toggle switches - straight PC terminals

Threaded bushing Ø 6,35 (1/4) : 5200

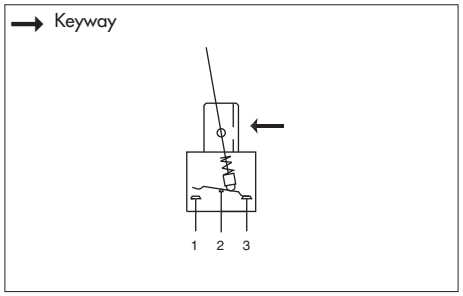

- **Terminal spacing 4,7 mm (.185)**
- 1, 2, 3 and 4 pole configurations
- Epoxy sealed terminals standard

For new projects, we recommend switches with support bracket (option Y) which holds the switch securely on the PCB.

Other terminal lengths presented under "Special options".

Also available with plain bushing, see "Special options" X371

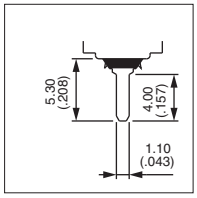

A

MODEL STRUCTURE

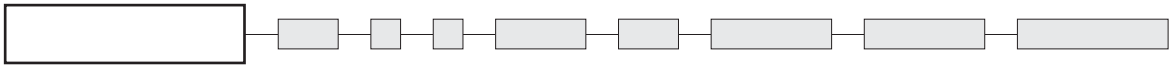

Shown with standard lever

Single pole



	III	II	I
	2-3		1-2
5236 B	ON	-	ON
5239 B	ON	OFF	ON
5237 B	MOM	OFF	MOM
5238 B	ON	OFF	MOM
5232 B	ON	-	MOM

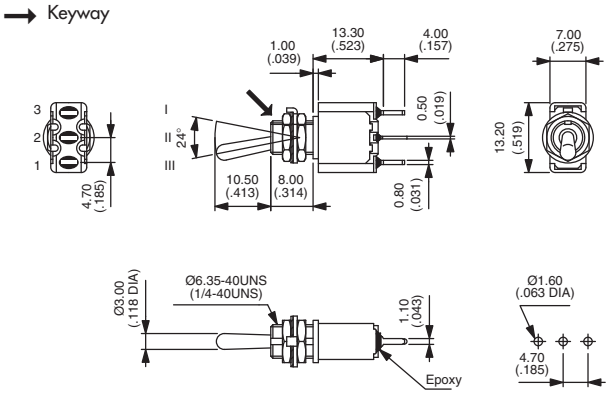

Double pole



	III	II	I
	2-3		1-2
	5-6		4-5
5246 B	ON	-	ON
5249 B	ON	OFF	ON
5247 B	MOM	OFF	MOM
5248 B	ON	OFF	MOM
5242 B	ON	-	MOM
5244 B*	ON	ON	ON
5244 1R B*	ON	ON	MOM
5244 2R B*	MOM	ON	MOM

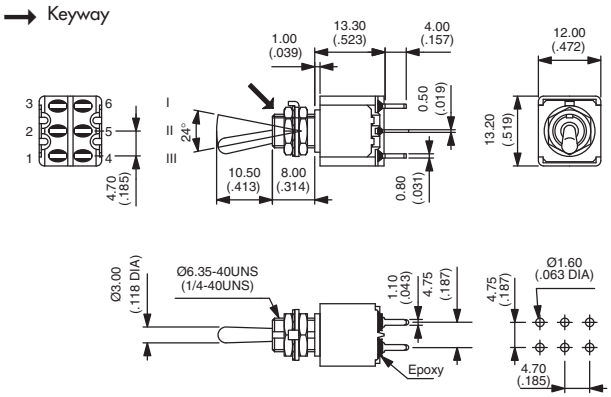

*Function 4 : SP in DP case - specify CT or TH connections, see end of catalogue.

Three pole



	III	II	I
	2-3		1-2
	5-6		4-5
	8-9		7-8
5256 B	ON	-	ON
5259 B	ON	OFF	ON
5257 B	MOM	OFF	MOM
5258 B	ON	OFF	MOM
5252 B	ON	-	MOM

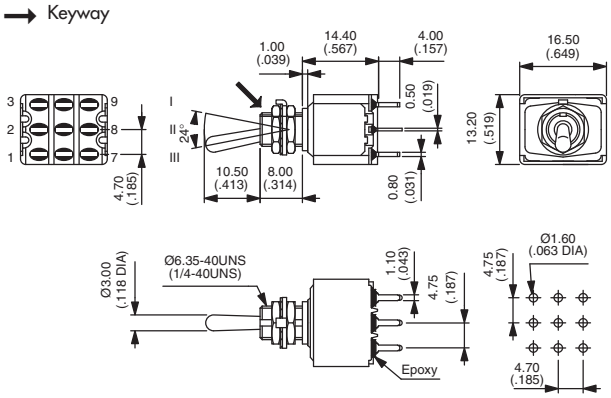

5000 series

Toggle switches - straight PC terminals

Threaded bushing Ø 6,35 (1/4) : 5200 - 5000

MODEL STRUCTURE

A

Four pole



	III	II	I
	2-3		1-2
	5-6		4-5
	8-9		7-8
	11-12		10-11
5266 B	ON	-	ON
5269 B	ON	OFF	ON
5267 B	MOM	OFF	MOM
5268 B	ON	OFF	MOM
5262 B	ON	-	MOM
5264 B*	ON	ON	ON
5264 1R B*	ON	ON	MOM
5264 2R B*	MOM	ON	MOM

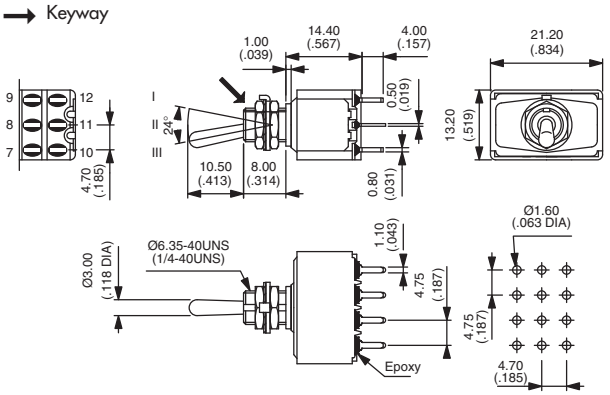

*Function 4 : DP in 4P case - specify CT ot TH connections, see end of catalogue.

PANEL CUT-OUT

5200 - 5000 - 5400

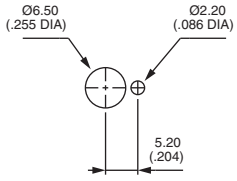

Standard

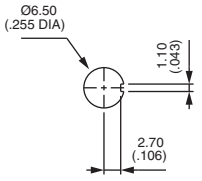

With **K** sealing option

Diagram as per 5200 model

5000 models

- **Terminal spacing 5,08 mm (.200)**
- Epoxy sealed terminals standard
- 1 and 2 pole configurations

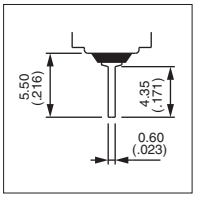

MODEL STRUCTURE

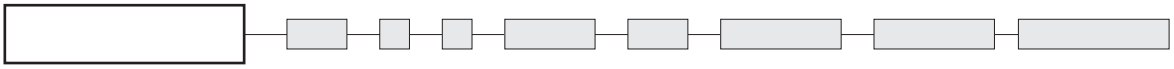

Shown with standard lever

Terminal spacing 5,08 (.200) - single and double pole



		III	II	I
		2-3		1-2
		5-6		4-5
Single pole	Double pole			
5036	**5046**	ON	-	ON
5039	**5049**	ON	OFF	ON
5037	**5047**	MOM	OFF	MOM
5038	**5048**	ON	OFF	MOM
5032	**5042**	ON	-	MOM
	5044*	ON	ON	ON
	5044 1R*	ON	ON	MOM
	5044 2R*	MOM	ON	MOM

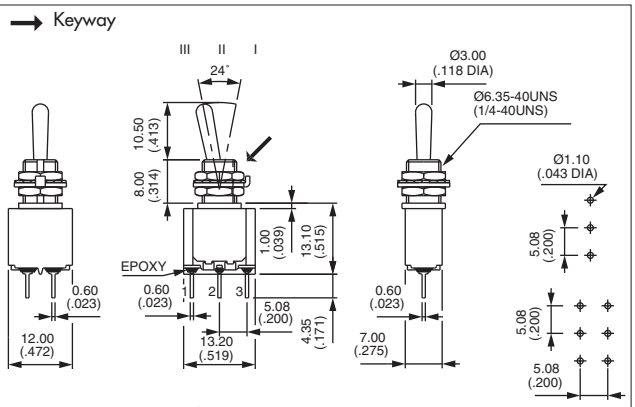

*Function 4 : SP in DP case - specify CT or TH connections, see end of catalogue.

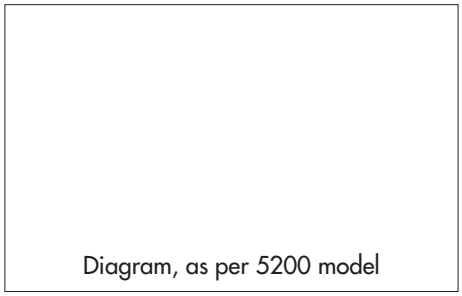

Diagram, as per 5200 model

5400 models

- **Threaded bushing Ø 6,35 mm (1/4)**
- **Terminal spacing 4 mm (.157)**
- 1, 2, 3 and 4 pole configurations

MODEL STRUCTURE

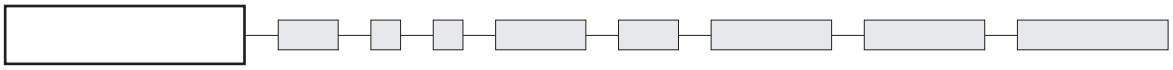

For model structure numbers, refer to **5200** models and replace 2 with 4.

Panel cut-out, see 5200.

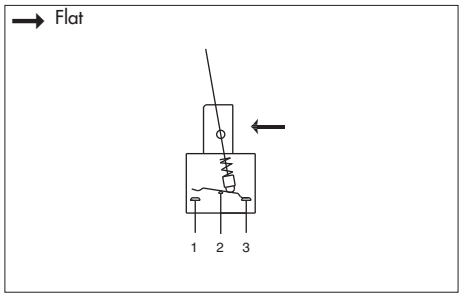

5900 models

- **Flatted bushing Ø 6,35 mm (1/4)**
- **Terminal spacing 4,7 mm (.185)**
- 1, 2, 3 and 4 pole configurations

MODEL STRUCTURE

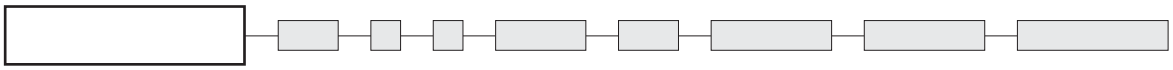

For model structure numbers, refer to **5200** models and replace 2 with 9.

PANEL CUT-OUT

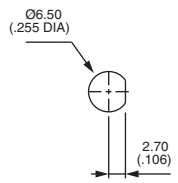

Standard or
with **K** sealing option

5000 series

Toggle switches - straight PC terminals

MODEL STRUCTURE

A

Diagram, as per 5200 model

5100 models

- **Threaded bushing Ø 6 mm x 0.75 SI (.236 x 0.75 IS)**
- **Terminal spacing 4,7 mm (.185)**
- 1, 2, 3 and 4 pole configurations

MODEL STRUCTURE

For model structure numbers, refer to **5200** models and replace 2 with 1.
Panel cut-out, see below.

Diagram, as per 5200 model

5300 models

- **Threaded bushing Ø 6 mm x 0.75 SI (.236 x 0.75 IS)**
- **Terminal spacing 4 mm (.157)**
- 1, 2, 3 and 4 pole configurations

MODEL STRUCTURE

For model structure numbers, refer to **5200** models and replace 2 with 3.

PANEL CUT-OUT

5100 - 5300

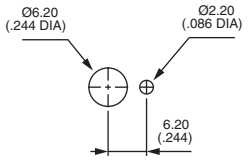

Standard

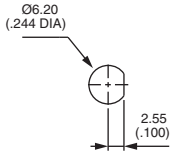

With **X408** sealing option

MODEL STRUCTURE

5000 series

Toggle switches - quick-connect terminals

Threaded bushing Ø 6,35 (1/4) : 5200Z

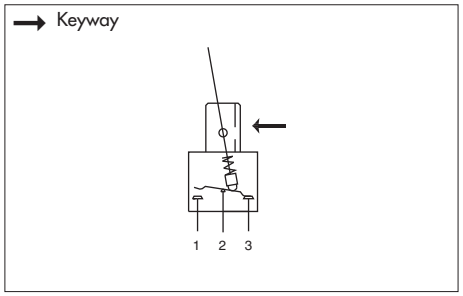

- **Terminal spacing 4,7 mm (.185)**
- Epoxy sealed terminals standard
- 1and 2 pole configurations

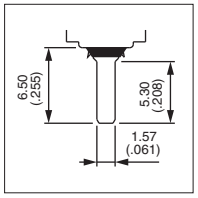

A

MODEL STRUCTURE

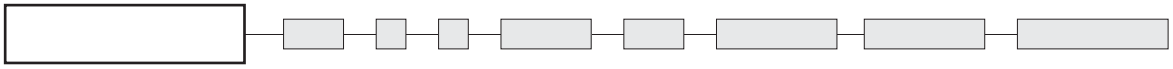

Shown with standard lever

Single pole



	III	II	I
	2-3		1-2
5236Z	ON	-	ON
5239Z	ON	OFF	ON
5237Z	MOM	OFF	MOM
5238Z	ON	OFF	MOM
5232Z	ON	-	MOM

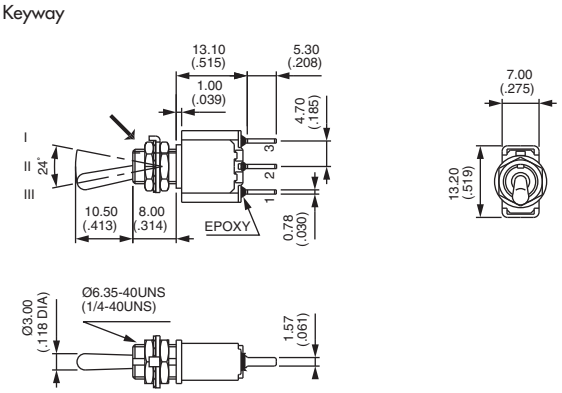

Double pole



	III	II	I
	2-3		1-2
	5-6		4-5
5246Z	ON	-	ON
5249Z	ON	OFF	ON
5247Z	MOM	OFF	MOM
5248Z	ON	OFF	MOM
5242Z	ON	-	MOM
5244Z*	ON	ON	ON
5244Z 1R*	ON	ON	MOM
5244Z 2R*	MOM	ON	MOM

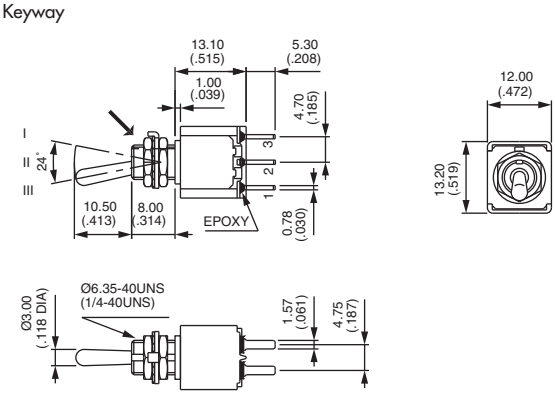

*Function 4 : SP in DP case - specify CT or TH connections, see end of catalogue.

PANEL CUT-OUT

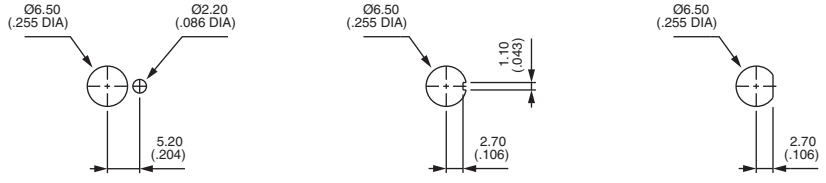

Standard

With **K** sealing option

With **X408** sealing option

5000 series

Toggle switches - quick-connect terminals

MODEL STRUCTURE

A

Diagram, as per 5900 model

5900Z models

- **Flatted bushing Ø 6,35 mm (1/4)**
- Terminal spacing 4,7 mm (.185)
- Epoxy sealed terminals standard
- 1and 2 pole configurations

MODEL STRUCTURE

For model structure numbers, refer to **5200Z** models and replace 2 with 9.

PANEL CUT-OUT

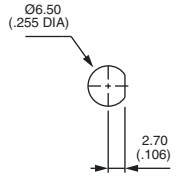

Standard or
with **K** sealing option

Diagram, as per 5200 model

5100Z models

- **Threaded bushing Ø 6 mm x 0.75 SI (.236 x 0.75 IS)**
- Terminal spacing 4,7 mm (.185)
- Epoxy sealed terminals standard
- 1and 2 pole configurations

MODEL STRUCTURE

For model structure numbers, refer to **5200Z** models and replace 2 with 1.

PANEL CUT-OUT

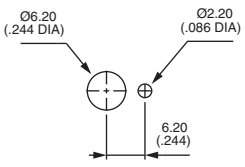

Standard

MODEL STRUCTURE

5000 series

Toggle switches - wire-wrap terminals

Threaded bushing Ø 6,35 (1/4) : 5200MIWR

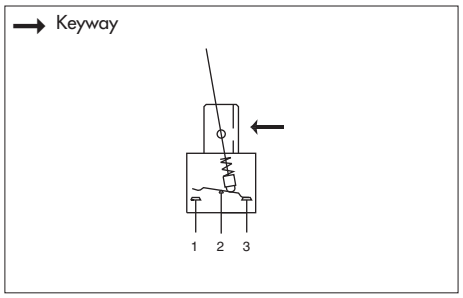

- **Terminal spacing 5,08 mm (.200)**
- Epoxy sealed terminals standard
- 1and 2 pole configurations
- Can also be used as extended PCB terminals

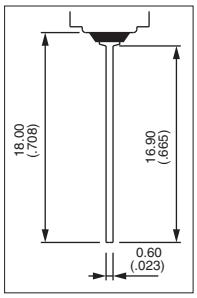

A

MODEL STRUCTURE

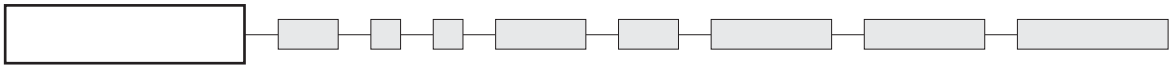

Shown with standard lever

Terminal spacing 5,08 (.200) - single pole



	III	II	I
	2-3		1-2
5236MIWR	ON	-	ON
5239MIWR	ON	OFF	ON
5237MIWR	MOM	OFF	MOM
5238MIWR	ON	OFF	MOM
5232MIWR	ON	-	MOM

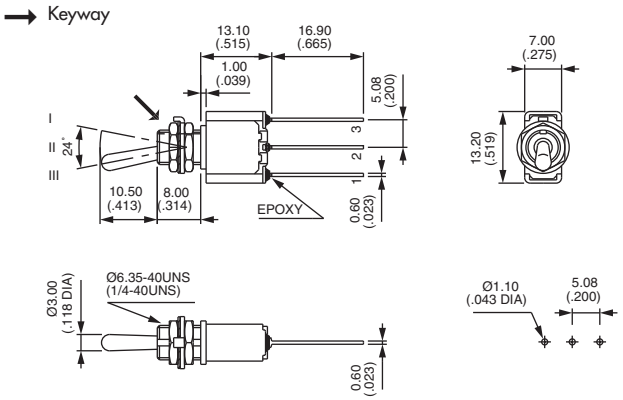

Terminal spacing 5,08 (.200) - double pole



	III	II	I
	2-3		1-2
	5-6		4-5
5246MIWR	ON	-	ON
5249MIWR	ON	OFF	ON
5247MIWR	MOM	OFF	MOM
5248MIWR	ON	OFF	MOM
5242MIWR	ON	-	MOM
5244 MIWR*	ON	ON	ON
5244 1R MIWR*	ON	ON	MOM
5244 2R MIWR*	MOM	ON	MOM

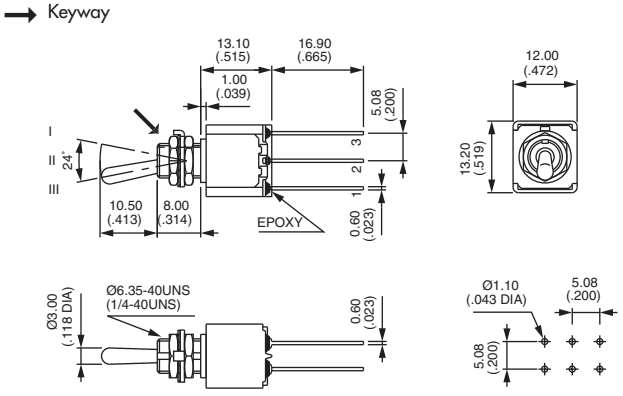

*Function 4 : SP in DP case - specify CT or TH connections, see end of catalogue.

PANEL CUT-OUT

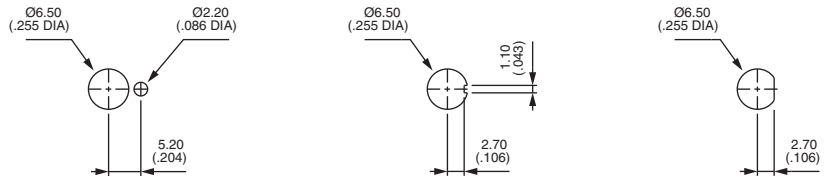

Standard

With **K** sealing option

With **X408** sealing option

5000 series

Toggle switches - plain bushing

Right angle terminals - horizontal : 5200W

MODEL STRUCTURE

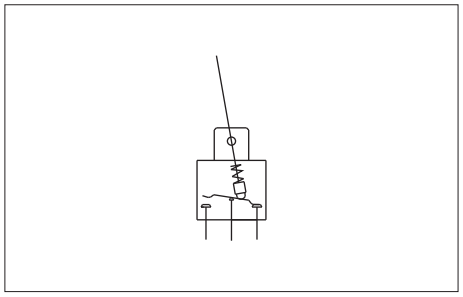

- **Terminal spacing 4,7 mm (.185)**
- 1, 2 and 3 pole configurations

Special switch **5200WX404** with reduced overall dimensions is presented under "Special options".

A

MODEL STRUCTURE

Shown with standard lever

Single pole



	III	II	I
	2-3		1-2
5236W	ON	-	ON
5239W	ON	OFF	ON
5237W	MOM	OFF	MOM
5238W	ON	OFF	MOM
5232W	ON	-	MOM

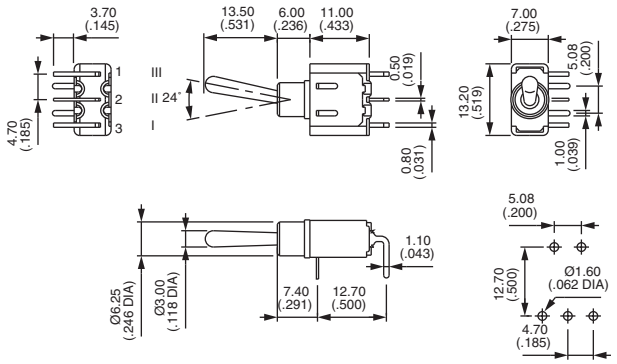

Double pole



	III	II	I
	2-3		1-2
	5-6		4-5
5246W	ON	-	ON
5249W	ON	OFF	ON
5247W	MOM	OFF	MOM
5248W	ON	OFF	MOM
5242W	ON	-	MOM
5244W*	ON	ON	ON
5244W 1R*	ON	ON	MOM
5244W 2R*	MOM	ON	MOM

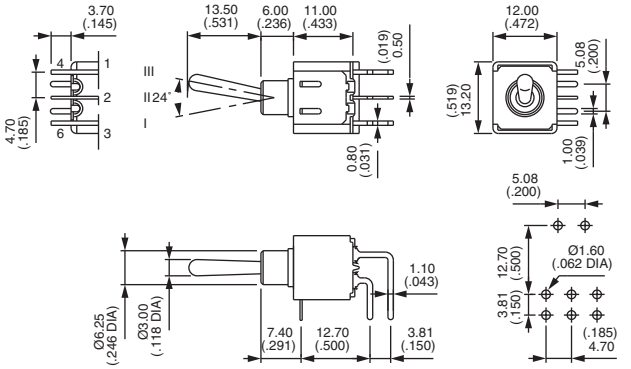

*Function 4 : SP in DP case - specify CT or TH connections, see end of catalogue.

Three pole



	III	II	I
	2-3		1-2
	5-6		4-5
	8-9		7-8
5256W	ON	-	ON
5259W	ON	OFF	ON
5257W	MOM	OFF	MOM
5258W	ON	OFF	MOM
5252W	ON	-	MOM

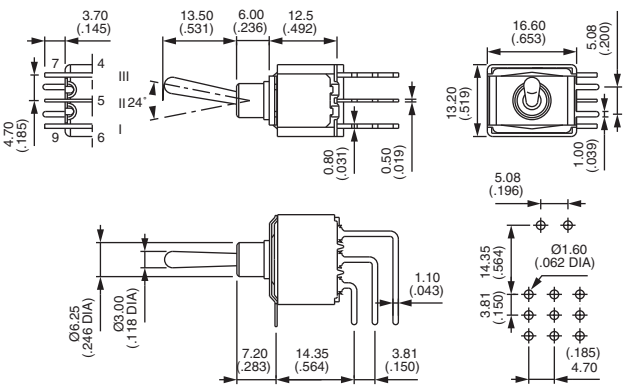

5000 series

Toggle switches - plain bushing

Right angle terminals - horizontal : 5400W

PCB MOUNTING FOR 5200W

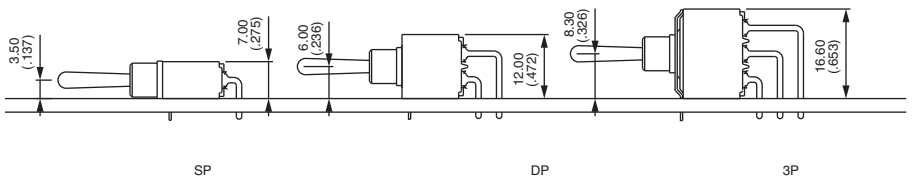

Diagram, as per 5200W model

5400W models

- **Terminal spacing 4 mm (.157)**
- 1and 2 pole configurations

MODEL STRUCTURE

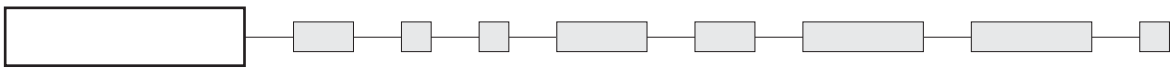

For model structure numbers, refer to **5200W** single and double pole and replace 2 with 4.

PC LAYOUT



5000 series

Toggle switches - plain bushing

Right angle terminals - vertical : 5200WW

MODEL STRUCTURE

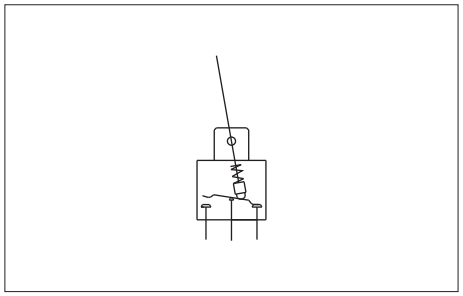

- **Pin spacing 3,81 mm (.150)**
- 1, 2, 3 and 4 pole configurations

A

MODEL STRUCTURE

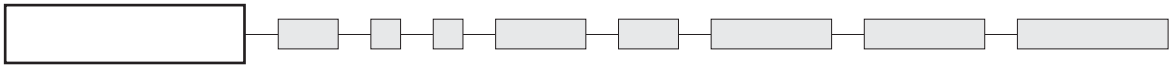

Shown with standard lever

Single pole



	III	II	I
	2-3		1-2
5236WW	ON	-	ON
5239WW	ON	OFF	ON
5237WW	MOM	OFF	MOM
5238WW**	ON	OFF	MOM
5232WW**	ON	-	MOM

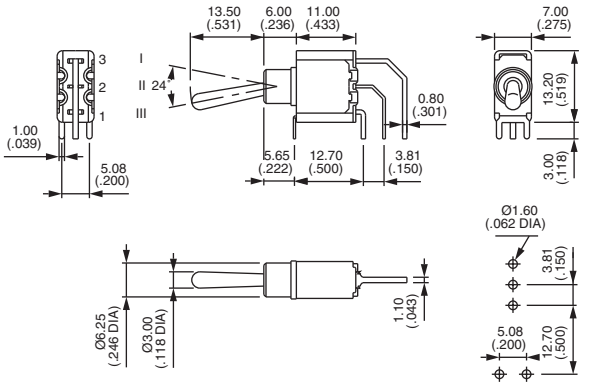

Double pole



	III	II	I
	2-3		1-2
	5-6		4-5
5246WW	ON	-	ON
5249WW	ON	OFF	ON
5247WW	MOM	OFF	MOM
5248WW**	ON	OFF	MOM
5242WW**	ON	-	MOM
5244WW*	ON	ON	ON
5244WW 1R*	ON	ON	MOM
5244WW 2R*	MOM	ON	MOM

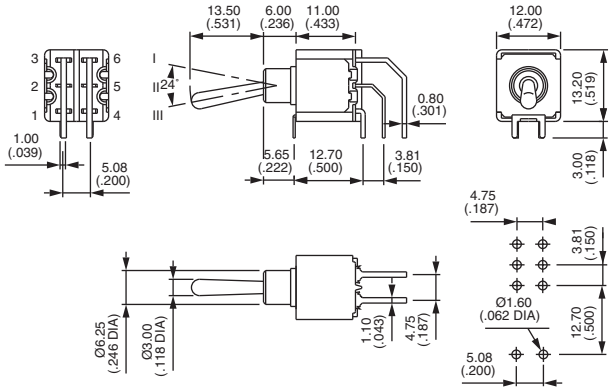

Three pole



	III	II	I
	2-3		1-2
	5-6		4-5
	8-9		7-8
5256WW	ON	-	ON
5259WW	ON	OFF	ON
5257WW	MOM	OFF	MOM
5258WW**	ON	OFF	MOM
5252WW**	ON	-	MOM

* and ** : see notes next page.

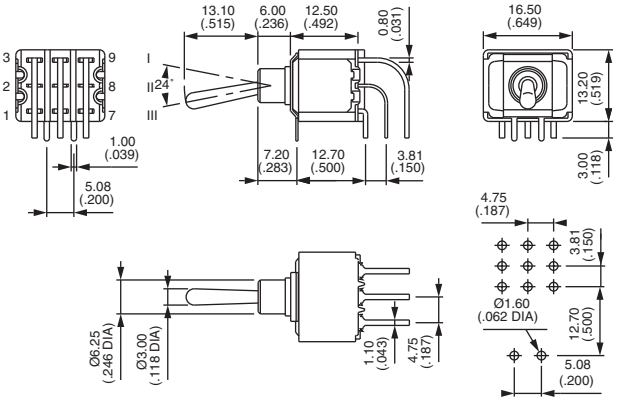

MODEL STRUCTURE

5000 series

Toggle switches - plain bushing

Right angle terminals - vertical : 5200WW - 5400WW

Four pole



	III	II	I
	2-3		1-2
	5-6		4-5
	8-9		7-8
	11-12		10-11
5266WW	ON	-	ON
5269WW	ON	OFF	ON
5267WW	MOM	OFF	MOM
5268WW**	ON	OFF	MOM
5262WW**	ON	-	MOM
5264WW*	ON	ON	ON
5264WW 1R*	ON	ON	MOM
5264WW 2R*	MOM	ON	MOM

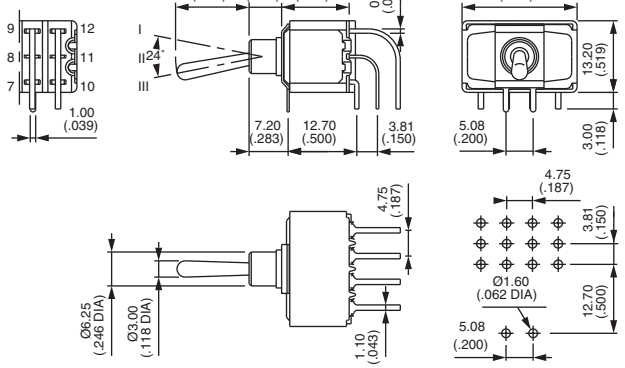

* Function 4 : SP in DP case, DP in 4P case - specify CT or TH connections, see end of catalogue.
** Functions 2 and 8 : reversed connection available, consult factory.

PCB MOUNTING

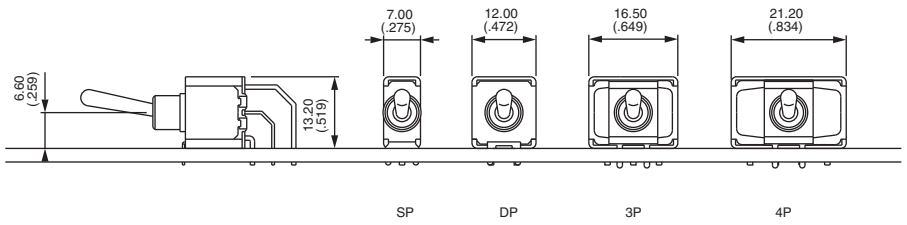

Diagram as per 5200WW model

5400WW models

- **Pin spacing 2,54 mm (.100)**
- 1, 2, 3 and 4 pole configurations

MODEL STRUCTURE

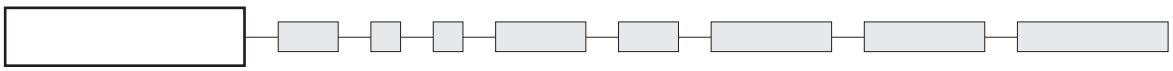

For model structure numbers, refer to **5200WW** models and replace 2 with 4.

PC LAYOUT

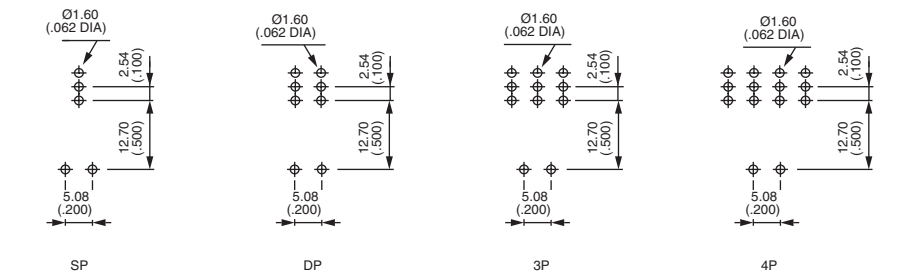

5000 series

Toggle switches - plain bushing

Straight PC terminals - bracket mounting : 5200Y

MODEL STRUCTURE

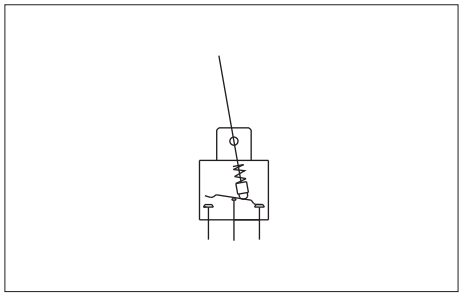

Brackets reduce mechanical stress on solder joints and increase resistance to vibrations.
Bracket material : tin plated steel.

- Epoxy sealed terminals standard
- 1and 2 pole configurations

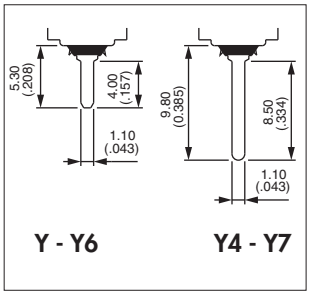

Y - Y6 **Y4 - Y7**

A

MODEL STRUCTURE

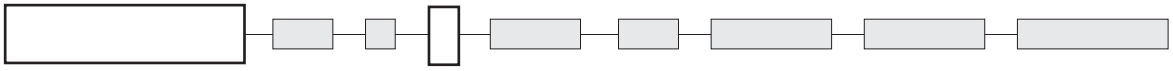

Shown with standard lever

Short bracket - width 15,75 (.620) - single pole : 5230Y



	III	II	I
	2-3		1-2
5236Y B	ON	-	ON
5239Y B	ON	OFF	ON
5237Y B	MOM	OFF	MOM
5238Y B	ON	OFF	MOM
5232Y B	ON	-	MOM

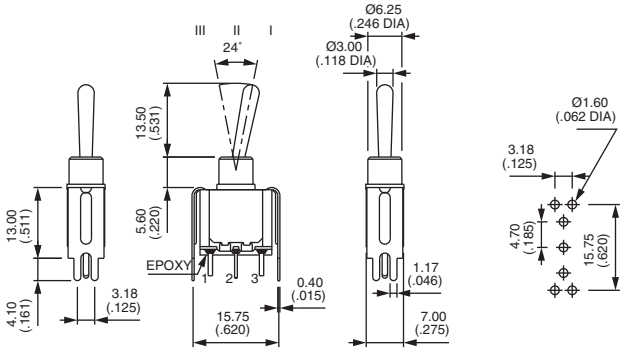

Short bracket - width 15,75 (.620) - double pole : 5240Y



	III	II	I
	2-3		1-2
	5-6		4-5
5246Y B	ON	-	ON
5249Y B	ON	OFF	ON
5247Y B	MOM	OFF	MOM
5248Y B	ON	OFF	MOM
5242Y B	ON	-	MOM
5244Y B*	ON	ON	ON
5244Y 1R B*	ON	ON	MOM
5244Y 2R B*	MOM	ON	MOM

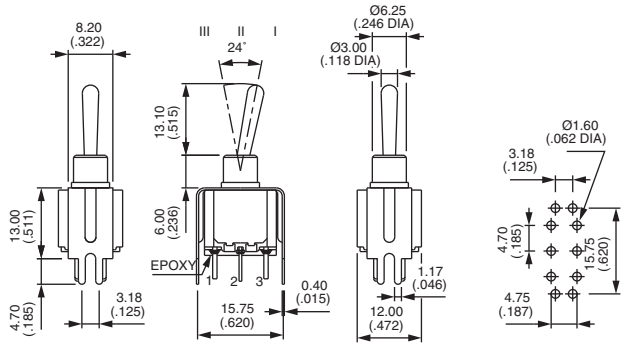

* Function 4 : SP in DP case - specify CT or TH connections, see end of catalogue.

5000 series

Toggle switches - plain bushing

Straight PC terminals - bracket mounting : 5200Y4 - Y6 - Y7

Tall bracket - width 15,75 (.620) : 5200Y4



		III	II	I
		2-3		1-2
		5-6		4-5
Single pole	Double pole			
5236Y4 B	**5246Y4 B**	ON	-	ON
5239Y4 B	**5249Y4 B**	ON	OFF	ON
5237Y4 B	**5247Y4 B**	MOM	OFF	MOM
5238Y4 B	**5248Y4 B**	ON	OFF	MOM
5232Y4 B	**5242Y4 B**	ON	-	MOM
	5244Y4 B*	ON	ON	ON
	5244Y4 1R B*	ON	ON	MOM
	5244Y4 2R B*	MOM	ON	MOM

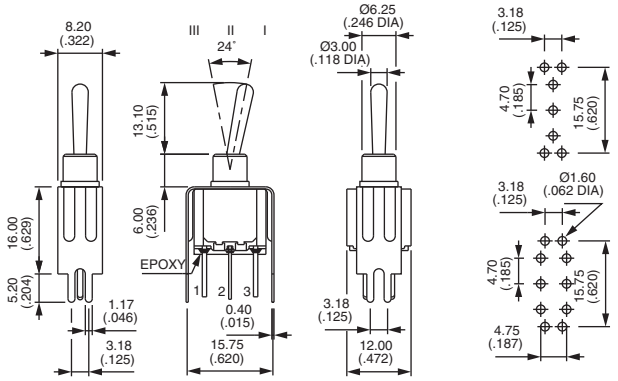

Short bracket - width 19,05 (.750) : 5200Y6



		III	II	I
		2-3		1-2
		5-6		4-5
Single pole	Double pole			
5236Y6 B	**5246Y6 B**	ON	-	ON
5239Y6 B	**5249Y6 B**	ON	OFF	ON
5237Y6 B	**5247Y6 B**	MOM	OFF	MOM
5238Y6 B	**5248Y6 B**	ON	OFF	MOM
5232Y6 B	**5242Y6 B**	ON	-	MOM
	5244Y6 B*	ON	ON	ON
	5244Y6 1R B*	ON	ON	MOM
	5244Y6 2R B*	MOM	ON	MOM

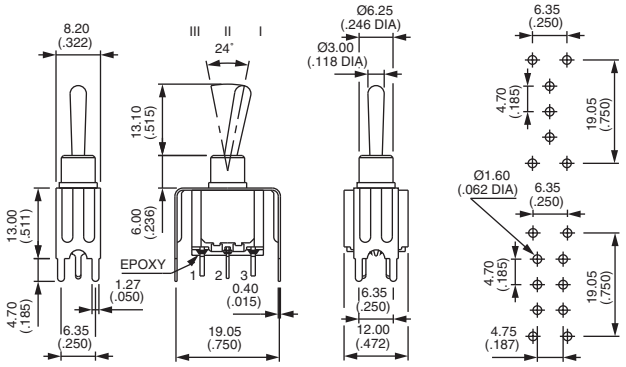

Tall bracket - width 19,05 (.750) : 5200Y7



		III	II	I
		2-3		1-2
		5-6		4-5
Single pole	Double pole			
5236Y7 B	**5246Y7 B**	ON	-	ON
5239Y7 B	**5249Y7 B**	ON	OFF	ON
5237Y7 B	**5247Y7 B**	MOM	OFF	MOM
5238Y7 B	**5248Y7 B**	ON	OFF	MOM
5232Y7 B	**5242Y7 B**	ON	-	MOM
	5244Y7 B*	ON	ON	ON
	5244Y7 1R B*	ON	ON	MOM
	5244Y7 2R B*	MOM	ON	MOM

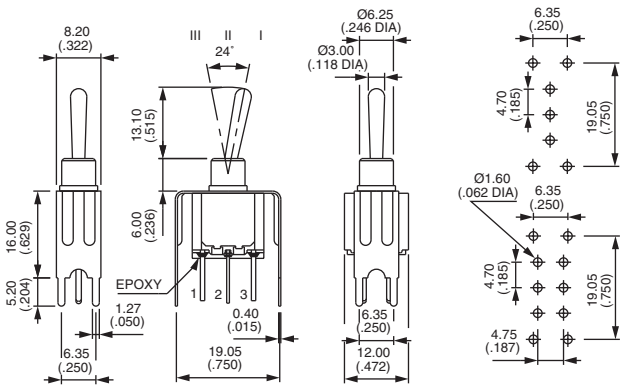

* Function 4 : SP in DP case - specify CT or TH connections, see end of catalogue.