

CONNECT AND PROTECT

Inpac

12/2022

nVent
SCHROFF

19" chassis – Inpac

OVERVIEW

MAIN KATALOG

Cabinets 1

Wall mounted cases 2

Accessories for cabinets and wall mounted cases . . 3

Climate control . . 4

Electronics cases 5

Subracks/ 19" chassis 6

Front panels, plug-in units 7

Systems 8

Power supply units 9

Backplanes 10

Connectors, front panel component system 11

Appendix 12



02192001



02192005

Robust 19" chassis, also for board assembly



02196001

Assembly with boards and hinged front panel

STANDARDS

- External dimensions in accordance with:
  IEC 60297-3-101
- Ingress protection IP 20 to IEC 60529
- GND/earthing connectors to:
  DIN EN 50178/VDE 0160
  DIN EN 62368-1/VDE 0805
  DIN EN 61010-1/VDE 0411 part 1
  DIN EN 61010-1A2/VDE 0411 part 1/A1

19" chassis – Inpac

OVERVIEW

Overview 6.128

19" CHASSIS WITH HIGH MECHANICAL STABILITY

- **Also usable as desk-top case**
- **Robust cases from aluminium die-cast frames to front and rear**
- **Flexible assembly for standardised board formats or individually, e.g. for mounting plates**
- **Cost benefit with mounting service and custom processing in ServicePLUS**



02192002

19" CHASSIS/DESK-TOP ENCLOSURE

- 2 U, 3 U, 4 U and 6 U heights



02192003

INPAC BUILT INTO 19"CABINET

SERVICEPLUS

e.g. individual configuration and assembly from 1 piece
e.g. printing
e.g. cut-outs in front or rear panels or cover plates
e.g. modification (special colours)
e.g. custom solutions (special depths, electromagnetically shielded applications)

inpac
19" chassis **6.130**

Accessories
Full-width front panels **6.131**
Full-width rear panels **6.131**
Support rails **6.132**
Perforated rails . . . **6.132**
GND/earthing kit . . . **6.133**
Dimensions 6.136

19" chassis – Inpac

19" CHASSIS



02192006

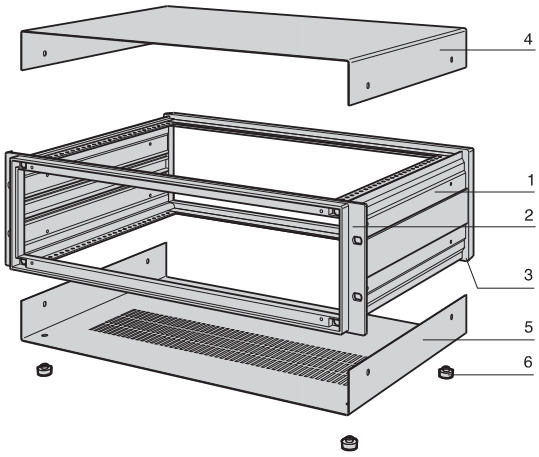

ipa30632

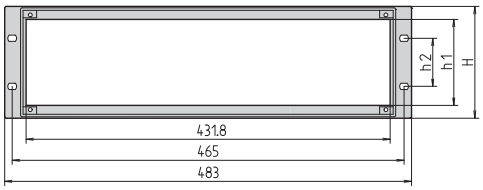

IPA30635

h1 = useable height

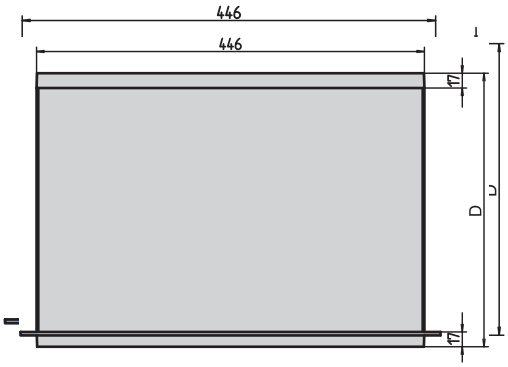

IPA30704



IPA30706

- For assembly with 19" components or individually with mounting plates
- Three rows ventilation slots in base for air inlet

DELIVERY INCLUDES (Kit)

Item	Qty	Description
1	2	Side panel, Al extrusion, RAL 7030, at 6 U: 2 Al corner profiles, 1 divider plate (steel plate)
2	1	Front frame, Al die-cast, RAL 7030, rear side with counterbores for drill holes to mount handles and front panels
3	1	Rear frame, Al die-cast, RAL 7030
4	1	Cover plate, St, 1 mm, zinc-coated RAL 7035, with GND/earthing connection
5	1	Base plate, St, 1 mm, zinc-coated RAL 7035, with GND/earthing connection
6	4	Case foot with anti-slip protection, PC, UL 94 V-0
7	1	Assembly kit

ORDER INFORMATION

Height H U	Height H mm	h mm	h1 mm	h2 mm	Depth D mm	Part no.
2	88.0	86.0	57.5	76.2	254.5	**10828-171**
2	88.0	86.0	57.5	76.2	314.5	**10828-172**
2	88.0	86.0	57.5	76.2	374.5	**10828-173**
3	132.5	130.5	102.0	57.2	254.5	**10828-151**
3	132.5	130.5	102.0	57.2	314.5	**10828-152**
3	132.5	130.5	102.0	57.2	374.5	**10828-153**
3	132.5	130.5	102.0	57.2	434.5	**10828-154**
4	177.0	174.5	146.5	101.6	254.5	**10828-156**
4	177.0	174.5	146.5	101.6	314.5	**10828-157**
4	177.0	174.5	146.5	101.6	374.5	**10828-158**
4	177.0	174.5	146.5	101.6	434.5	**10828-159**
6	265.9	263.5	235.4	190.5	374.5	**10828-168**
6	265.9	263.5	235.4	190.5	434.5	**10828-169**

NOTE

- Max. installation space when fitting 19" components is 75 HP
- Scope of delivery includes screws to fix rear and front panels
- Cover- and base plate available in other colors
- Modifications such as breakouts or other dimensions possible
- or mounting / extension parts, see the following pages

19" chassis – Inpac

FRONT PANEL

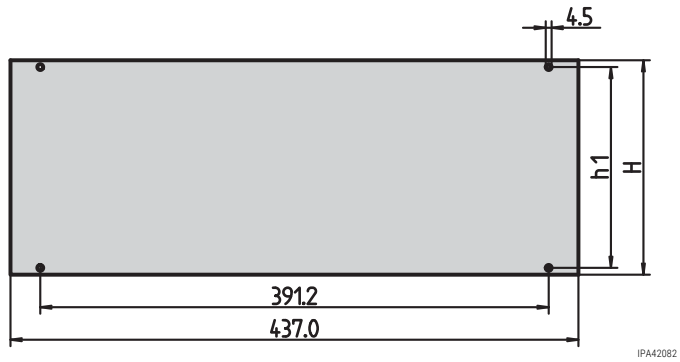

DELIVERY COMPRISES

Item	Qty	Description
1	1	Front panel, Al, 2.5 mm, anodised, cut edges untreated

ORDER INFORMATION

Height U	Height H mm	h1 mm	Part no.
2	76.0	65.6	**30828-055**
3	120.5	110.0	**30828-058**
4	165.0	154.5	**30828-061**
6	253.8	243.4	**30828-067**

Note

- The assembly kit for the front panel is included with the 19" chassis

FRONT PANEL, BOTTOM-HINGED

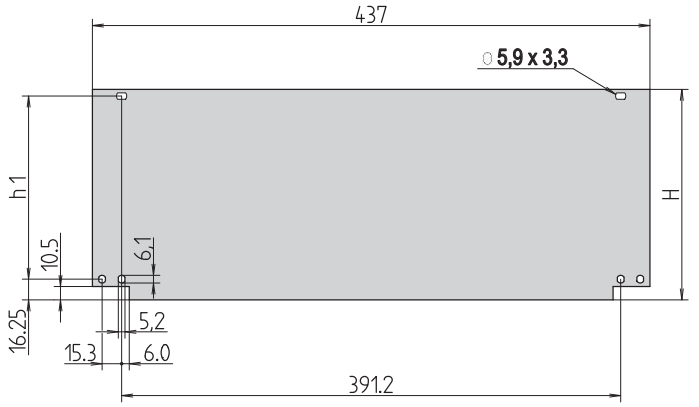

DELIVERY COMPRISES

Item	Qty	Description
1	1	Front panel, hinged, Al, 2.5 mm, anodised, cut edges untreated

ORDER INFORMATION

Height U	Height H mm	h1 mm	Part no.
2	76.0	54.5	**30828-085**
3	120.5	99.0	**30828-088**
4	165.0	143.5	**30828-091**
6	253.8	232.3	**30828-097**
Hinge for front panel PPE, UL 94 V-0, PU 1 kit (includes fixing material kit and 2 collar screws)			**20828-028**

Note

- Please order hinge for front panel separately

Hinge:



REAR PANEL WITH VENTILATION OPENINGS

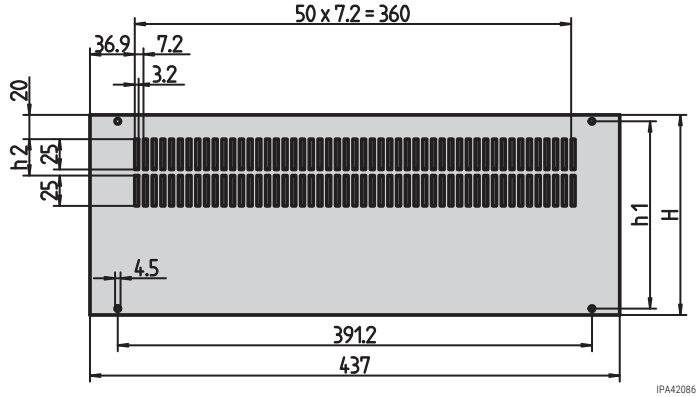

DELIVERY COMPRISES (kit)

Item	Qty	Description
1	1	Rear panel, incl. assembly kit, Al, 2 mm, anodised, cut edges untreated

ORDER INFORMATION

Height U	Height H mm	h1 mm	h2 mm	Part no.
2	76.0	65.6	–	**30828-070**
3	120.5	110.0	–	**30828-073**
4	165.0	154.5	–	**30828-076**
6	253.8	243.4	30	**30828-082**

Note

- The scope of delivery of the 19" chassis includes an assembly kit for the front panel

Part number in bold face type: ready for shipping within 2 working days
Part number in normal type: ready for shipping within 10 working days

SUPPORT RAIL FOR GUIDE RAILS

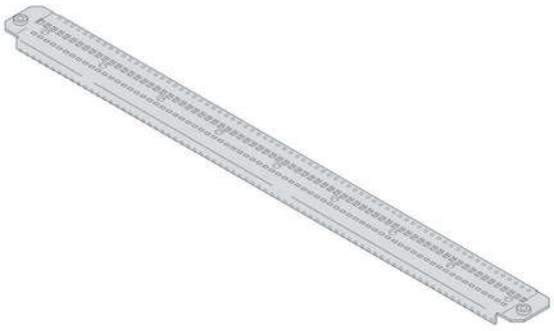

02121050

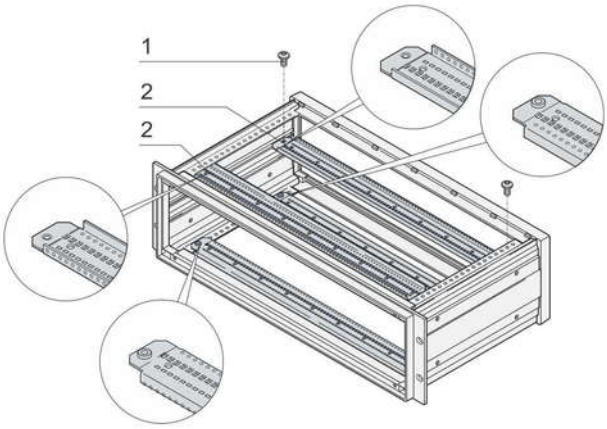

02121053

- 4 support rails to fix PCBs with guide rails
- Support rail can also be used to fix a custom mounting plate

DELIVERY INCLUDES

Item.	Qty	Description
1	4	Support rail, St 1,5 mm, AlZn, length 409 mm, usable width 75 HP (usable width 381 mm)
2	8	Screw, St, M4x8, Torx 20
3	1	User manual

ORDER INFORMATION

Description	Part no.
Support rail for guide rail monting, 75 HP	**20828-130**
Accessories	
Guide rails, accessories, 160 mm deep PC, UL 94 V-0, red, groove width 2 mm, PU 10 pieces	**24568-363**
Guide rail, standard, 160 mm tief PC, UL-94-V0, red, groove width 2 mm, PU 10 pieces	**24568-361**
Torx panhead screw 2.5 x 9.3, zinc-plated, PU 100 pieces 2,5 x 9,3, St, zinc-plated Assembly part kit for guide rail	**24560-141**
ESD clip for guide rails Spring steel, tin-plated, silver, PU 50 pieces	**24560-255**
Recomendet product	
Perforated Rail for Mounting of DIN Connectors EN 60603-2, DIN 41612, 75 HP, 2 pieces	**20828-131**
Threaded inserts, 75 HP, with thread M2.5, 2 pieces	**20828-132**

PERFORATED RAIL



02121051

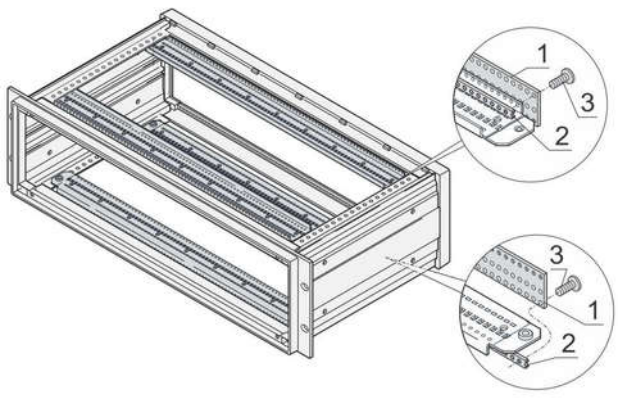

02121054

- For Connector Mounting Accoring to DIN 4161

DELIVERY INCLUDES

Item.	Qty	Description
1	2	Threaded insert, perforiated, St 1,5 mm, AlZn, 75 HP
2	1	User Manual

ORDER INFORMATION

Item	Description	Part no.
1	Theaded insertt for mounting of DIN-connecotrs EN 60603-2, DIN 41612, 75 HP, 2 pieces	**20828-131**
Accessories		
Torx panhead screw M2.5 x 7, St, nickel-plated, Torx 8 , tem 3		**24560-147**
Recomended products		
Gewindestreifen 75 HP with thred M2,5, 2 pieces ,item2		**20828-132**

FRONT HANDLES

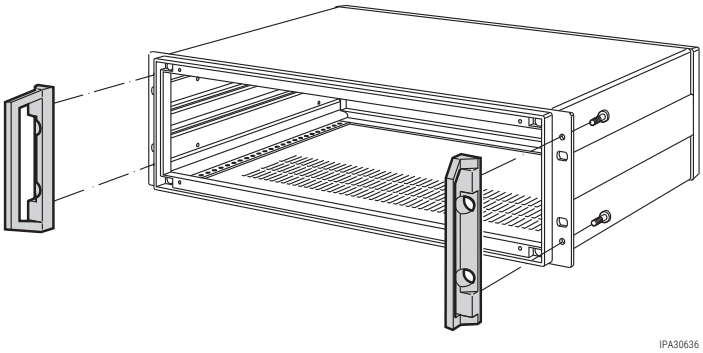

IPA30636

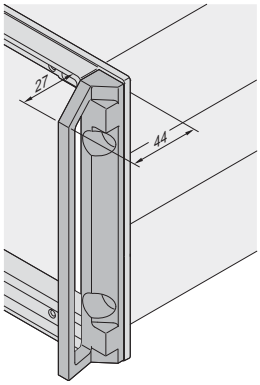

02108050

- Load-carrying capacity 35 kg per pair

DELIVERY COMPRISES (kit)

Item	Qty	Description
1	2	Front handle, Al die-cast, powder-coated, RAL 7030, incl. assembly kit

ORDER INFORMATION

Height U	Part no.
3	**20828-127**
4	**20828-128**
6	**20828-129**

GND/EARTHING KIT

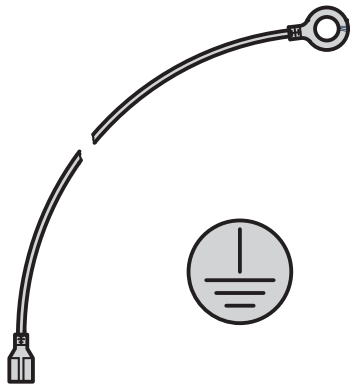

aza43284

- The GND/earthing kit allows VDE-compliant earthing of the case to:
  - DIN EN 50178/VDE 0160
  - DIN EN 62368-1/VDE 0805
  - DIN EN 61010-1/VDE 0411 Part 1
  - DIN EN 61010-1A2/VDE 0411 Part 1/A
- VDE inspection has been carried out

ORDER INFORMATION

Description	Qty/PU	Part no.
GND/earthing kit, Cu wire, 1.5 mm^2, PVC sleeve, green/yellow, links side panels, top cover, base plate and rear panel	1	**21100-814**

ASSEMBLY TOOL

	Description	Application	Dimension	Qty/PU	Part no.
	Torx screwdriver	To fix the support rails	T20	1	**64560-027**

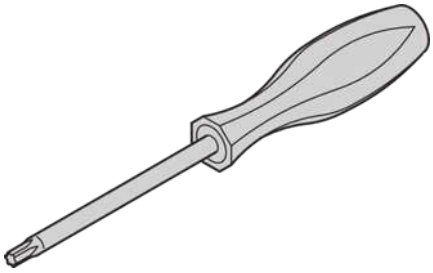

Part number in bold face type: ready for shipping within 2 working days
Part number in normal type: ready for shipping within 10 working days

19" chassis – Inpac

DIMENSIONS

19" FRONT FRAME

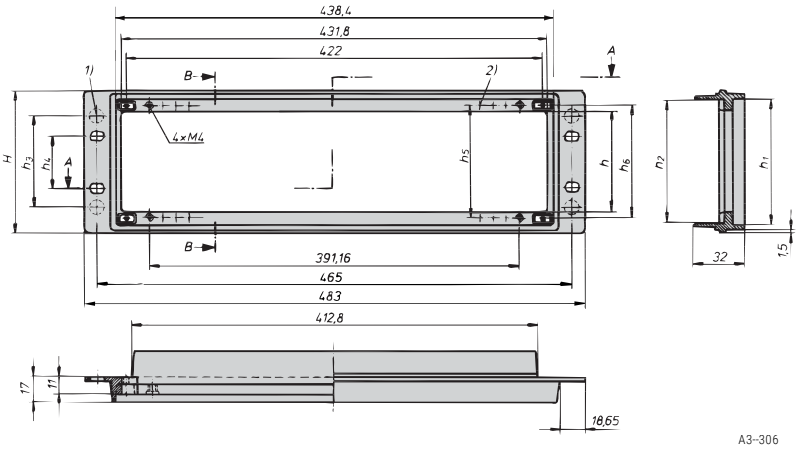

Section A-A

There are counterbores at the rear side of the front frame which can be drilled if required:
1) For handle mounting
2) For mounting of partial-width front panel (grid 5.08 mm)

19" REAR FRAME

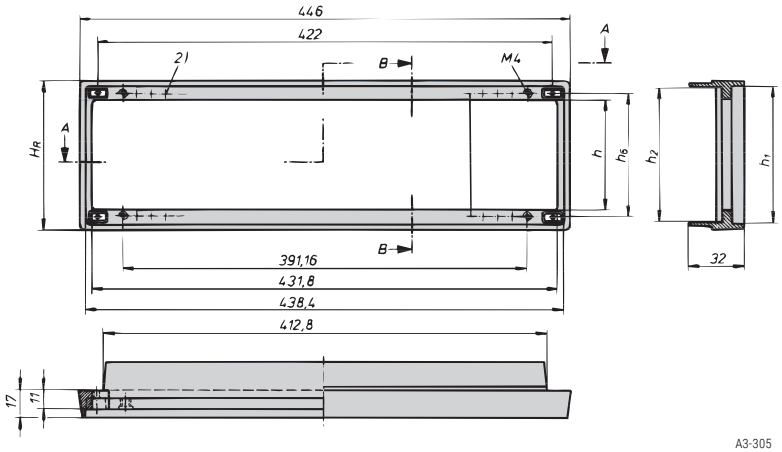

Section A-A

Dimensions table

Height in U	H	H_R	h	h_1	h_2	h_3	h_4	h_5	h_6	h_7
2	88,0	86,0	57,5	77,3	69,8	25,0	76.2	65,5	68,0	68,4
3	132.5	130.5	102.5	121.8	114.3	90,0	57.1	110.0	112,5	112.8
4	177.0	175.0	146.5	166.3	158.8	134.5	101.6	154.5	157,0	157.3
6	265.9	263.9	235.4	255.2	247.7	233.4	190.4	243.4	245,9	245,9

19" chassis – Inpac

DIMENSIONS

SIDE PANEL

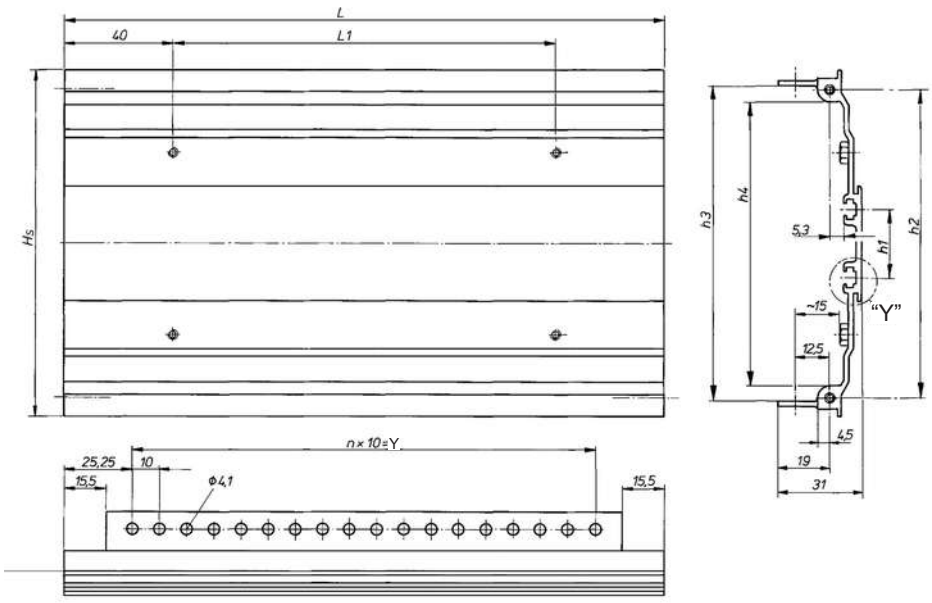

A3–304a

Detail "Y"

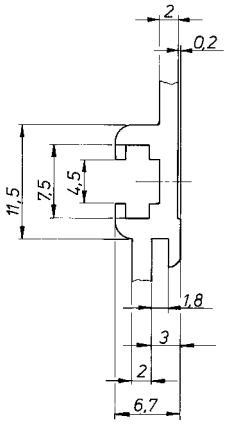

A3–304b

Dimensions table

Height in U	H	h_1	h_2	h_3	h_4	L	L_1	(n)	Y	T
2	82,6	–	68,0	71,4	59,0	220,5	140,5	17,0	170	254,5
2	82,6	–	68,0	71,4	59,0	280,5	200,5	23,0	230	314,5
2	82,6	–	68,0	71,4	59,0	340,5	260,5	29,0	290	374,5
3	127.0	24,0	112,5	115,8	103,5	220,5	140,5	17,0	170	254,5
3	127.0	24,0	112,5	115,8	103,5	280,5	200,5	23,0	230	314,5
3	127.0	24,0	112,5	115,8	103,5	340,5	260,5	29,0	290	374,5
4	171,0	68,5	157,0	160,3	148,0	220,5	140,5	17,0	170	254,5
4	171,0	68,5	157,0	160,3	148,0	280,5	200,5	23,0	230	314,5
4	171,0	68,5	157,0	160,3	148,0	340,5	260,5	29,0	290	374,5
6	260,4	157,1	245,9	248,9	236,5	220,5	140,5	17,0	170	254,5
6	260,4	157,1	245,9	248,9	236,5	280,5	200,5	23,0	230	314,5
6	260,4	157,1	245,9	248,9	236,5	340,5	260,5	29,0	290	374,5

Part number in bold face type: ready for shipping within 2 working days
Part number in normal type: ready for shipping within 10 working days

North America

Warwick, RI, USA
Tel +1.401.738.1722
San Diego, CA, USA
Tel +1.858.740.2400

Europe, Middle East & India

Straubenhardt, Germany
Tel +49 7082 794 0
Betschdorf, France
Tel +33 3 88 90 64 90
Warsaw, Poland
Tel +48 22 209 98 35
Hemel Hempstead,
Great Britain
Tel +44 1442 24 04 71
Lainate, Italy
Tel +39 02 932 714 1
Dubai, United Arab Emirates
Tel +971 4 82 38 666
Bangalore, India
Tel +91 80 6715 8900
Istanbul, Turkey
Tel +90 541 368 0941

Asia Pacific

Shanghai, China
Tel +86 21 2412 6943
Singapore
Tel +65 6768 5800
Shin-Yokohama, Japan
Tel +81 45 476 0271

Our powerful portfolio of brands:

CADDY ERICO HOFFMAN RAYCHEM SCHROFF TRACER

nVent

nVent.com/SCHROFF

©2018 nVent. All nVent marks and logos are owned or licensed by nVent Services GmbH or its affiliates. All other trademarks are the property of their respective owners.
nVent reserves the right to change specifications without notice.