Brand of NTN corporation

Technical data

UKT211H

Bearing units



Grey cast housing, radial insert ball bearing with adapter sleeve,seal with slinger

KIT CONTENT

UK211G2H, T211

VISUAL (S)

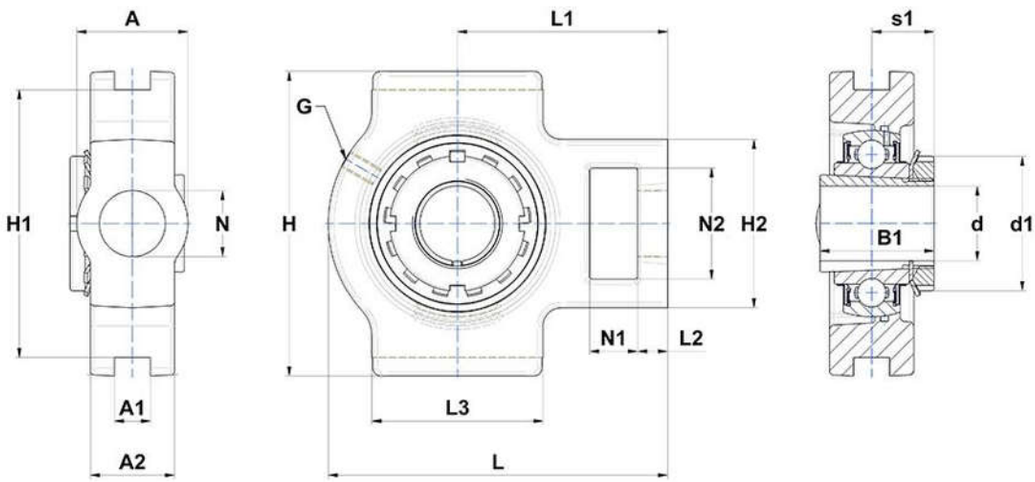

PRODUCT DEFINITION

Brand	SNR
A - Housing width	64 mm
A1 - Width of location slot	22 mm
A2	38 mm
B1 - Overall width Inner Ring	59 mm
d - Shaft diameter	50 mm

PRODUCT DEFINITION	
d1 - Outer dia of eccent. Lock. collar / nut of adapter sleeve	75 mm
G - Grease fitting	M6x1
H - Housing length, width or diameter	146 mm
H1 - Distance between location slots	130 mm
H2 - Housing height / width	102 mm
L - Housing length	171 mm
L1 - Distance attachment end face to bearing centerline	106 mm
L2 - Thickness of attachment end	19 mm
L3 - Length of guidance slot/face	95 mm
N - Mounting hole dimension	35 mm
N1 - Length of attachment slot	25 mm
N2 - Height of attachment slot	64 mm
s1 - Distance nut to middle of bearing raceway	29 mm

PRODUCT PERFORMANCE	
C - Dynamic load rating	43550000 mN
C0 - Static load rating	29200000 mN
Operating temperature min.	253,15 °K
Operating temperature max.	373,15 °K

OTHER FEATURES	
Mass	4,01 kg
Adapter sleeve designation	H2311