trumeter
innovation by design

VISTA TOUCH PROCESS METER

Touch Screen Process Controller and Indicator

THREE YEAR 3 WARRANTY

For use with standard 4-20mA and 0-10V sensors

WITH LOCAL DATA LOGGING



MULTIPLE CONFIGURABLE DISPLAY OPTIONS



trumetercloud



- **Math Functions** +, -, ×, ÷, x²
- Eight **Sensor Inputs** 4 x 4-20mA and 4x 0-10V
- Built-in **Gauges** For different requirements
- **Modbus®** RTU over RS485 and TCP over Ethernet
- Graphic **Display**
- Touchscreen **programmable**
- Built-in **remote monitoring**
- **Data logging** and **load/save** via USB
- 2 Relay Outputs, 1 Analog Output, 2 Digital Inputs
- 0.1% Accuracy

- Supports up to 8 sensors (4x 4-20mA and 4x 0-10V)
- 4x Programmable math functions
- Advanced non-linear scaling
- 0.1% accuracy across the input range
- Local data logging through USB
- 65K full color 70mm x 70mm [2.76” x 2.76”] graphics display
- Simple and intuitive touchscreen
- Fully configurable from the front panel
- Load and save configuration data to a USB flash drive
- Free access to the IoT Trumeter Cloud remote monitoring texts and emails alarm notifications
- Modbus® RTU and TCP
- Industry standard ¼ DIN mounting
- Ethernet and RS485 as standard
- Modular pluggable quick connect/disconnect connectors
- IP65, NEMA250 & UL50E Type 12 and Type 4 protection

Go to www.trumeter.com for further information

trumeter
innovation by design

custom is our passion

Measurement Input

Input	Operating Range	Accuracy	Resolution	Frequency
Voltage [1, 2, 3, 4]	0V to +10V DC	0.1% of full scale	<400uV	DC
Current [1, 2, 3, 4]	0-20mA	0.1% of full scale	<2uA	DC

Power Supply

Mains Version	100-277VAC 50/60Hz 10W
Low Voltage Version	12-24VAC/DC and 50/60Hz 10W

Memory

2MB of internal non-volatile memory to store all settings
Supports USB flash drive (FAT16/FAT32 format up to 32GB)

Communications, Networking and IoT

RS485	Modbus RTU
Ethernet	Modbus TCP
Platform	Trumeter IoT Cloud
USB	Mass storage (USB flash drive)

Outputs

Relay	2 x Form C relay (277V AC / 5A Max | 30V DC / 5A Max)
Analog	4-20mA Analog Output
24VDC	Excitation voltage output (50mA Max)

Control Inputs

Opto Isolated	2 x control input (12V to 277V AC/DC)

Certifications

CE, UL and cUL, EN61010-1

Environmental

Storage Temperature	-20°C to +70°C (-4°F to +158°F)
Operating Temperature	-20°C to +60°C (-4°F to +140°F)
Optimal Temperature	-20°C to +45°C (-4°F to +113°F)
Continuous operation above +45°C (+113°F) is not recommended	
Humidity	0% to 85% max non-condensing
IP rating (from the front)	IP65, NEMA250 & UL50E Type 12 and Type 4
Shock	20g to IEC68-2-27
Vibration	5-500Hz, 2g
Altitude	Up to 2000 meters
Installation Category	II
Pollution Degree	2

Display

Visible screen area	70mm x 70mm [2.76" x 2.76"]
Resolution	480 x 480 pixels
Brightness	450cd/m²
Contrast ratio	800:1
Colors	65,536
Impact Resistance	IK03 Toughened glass to EN62262
Viewing angle	160° horizontally; 160° vertically
Touch	Multi zone touch capacitive
Scratch Resistance	6H to ASTM D4587

Typical Application

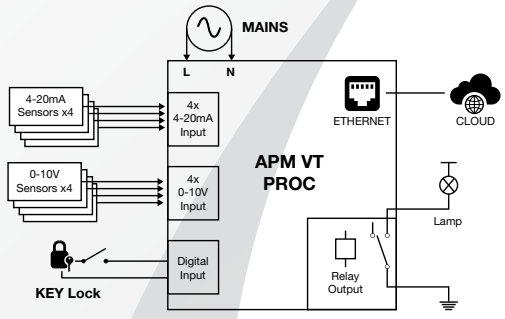

Mechanical

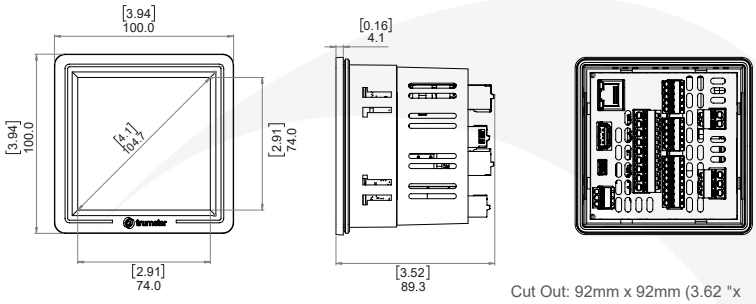

Cut Out: 92mm x 92mm (3.62 "x 3.62") as per DIN IEC 61554

Part Numbers

VT-PROC-LV	Vista Touch Process Meter 12-24VAC/DC
VT-PROC-HV	Vista Touch Process Meter 100-277VAC
VT-PROC-XXX	Vista Touch Process Meter Custom

c UL us LISTED
MEASURING AND TESTING EQUIPMENT
E469787

CE RoHS



www.trumeter.com

Trumeter (The Americas)
6601 Lyons Rd, Suite H-7
Coconut Creek, Florida
FL 33073,
USA
Tel: +1 954 725 6699
Email: sales.usa@trumeter.com

Trumeter (Europe)
Pilot Mill
Alfred Street
Bury,
BL9 9JR, UK
Tel: +44 161 674 0960
Email: sales.uk@trumeter.com

Innovative Design Technologies Sdn. Bhd
Lot 5881, Lorong Iks Bukit Minyak 1
Taman Perindustrian Iks, 14000 Bukit Tengah
Penang, Malaysia
Web: www.idtworld.com
Tel: + 604 5015700
Email: sales.my@idtworld.com