

Image may differ from product. See specification for details.

FNL 518 B

FNL cast flanged, non-split housing

FNL cast flanged, non-split housings are well-proven machine parts that provide simple and reliable housing in applications without horizontal frames. They enable the full service life potential of the incorporated bearings to be exploited with less need for maintenance. FNL housings are supplied with a cover either for shaft ends (suffix A) or for through shafts (suffix B). Smaller sizes (up to and including size 13) have a triangular flange, larger sizes have a square flange.

- Well-proven
- Less need for maintenance

Overview

Dimensions

Diameter of bearing seat	160 mm
Centre distance between bolt holes	170 mm
Attachment bolt diameter	16 mm

Properties

Housing type	Flanged
Housing configuration	One-piece
Mounting arrangement	Through shaft
Number of bolt holes for fasteners	4
Material, housing	Cast iron
Bearing housing seal type	Lip seal
Housing lubrication feature/possibility	Grease

Logistics

Product net weight	12 kg
eClass code	23-05-17-02
UNSPSC code	31171519

Technical specification

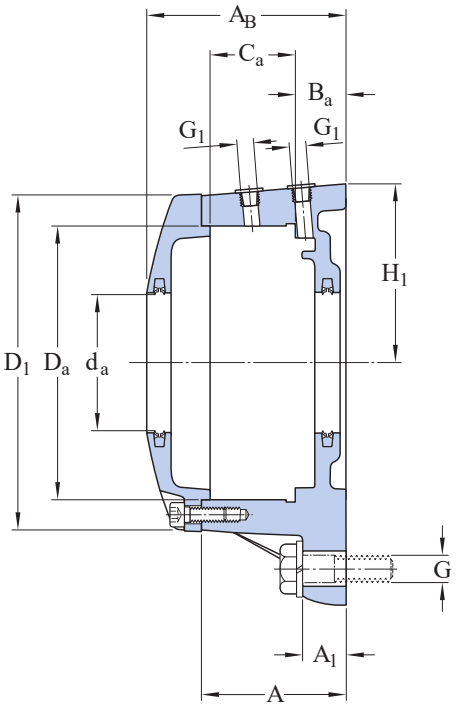

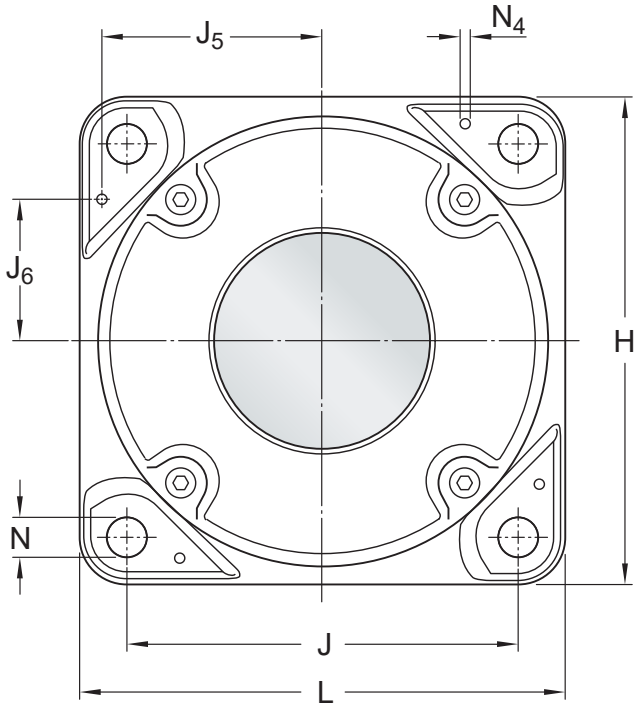

Dimensions

BEARING SEAT

D_a	160 mm	Diameter of bearing seat

C_a	50 mm	Width of bearing seat
H_1	105 mm	Centre height of bearing seat
B_a	30 mm	Distance bearing seat to support surface

OUTSIDE DIMENSIONS

d_a	80 mm	Shaft diameter
A	85 mm	Base width
A_1	25 mm	Foot width
A_B	118 mm	Width
D_1	196 mm	Outside diameter of housing cover
G_1	1/8-27 NPSF	Thread of relubrication holes
H	210 mm	Height
L	210 mm	Length
J	170 mm	Distance of attachment bolts
N	18 mm	Diameter of attachment bolt hole

DOWEL PINS

J_5	95 mm	Position of dowel pin
J_6	60 mm	Position of dowel pin
$N_{4\ max.}$	8 mm	Diameter of dowel pins

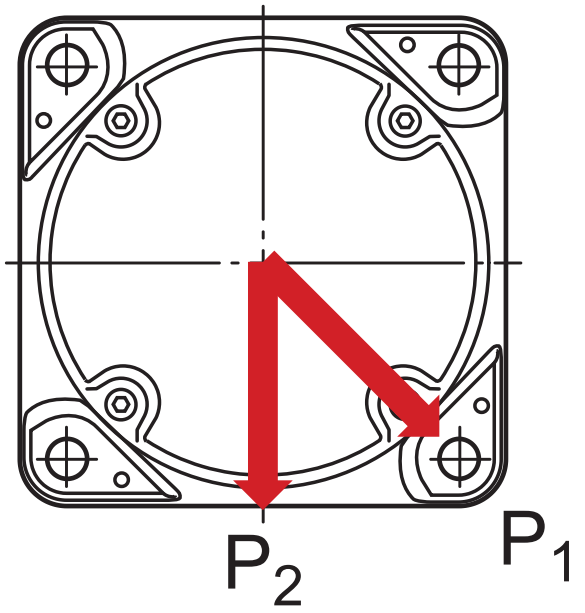

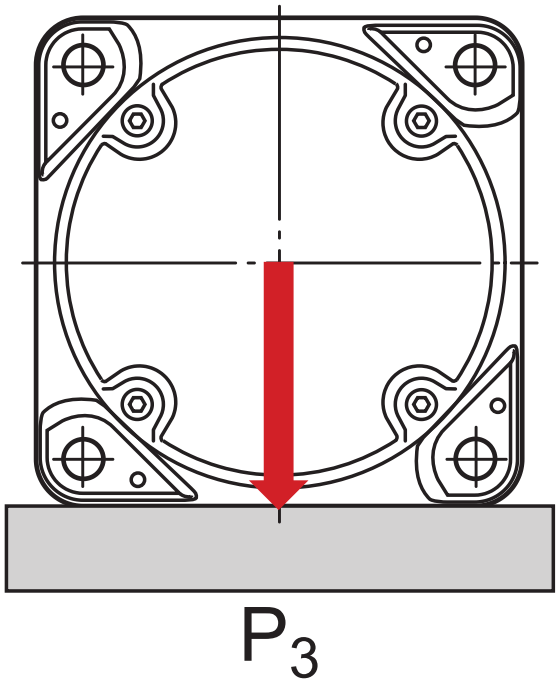

Breaking loads

P_1	170 kN	Breaking load
P_2	170 kN	Breaking load
P_3	490 kN	Breaking load

Materials

Housing	Cast iron
Corrosion protection	Paint - in accordance with ISO 12944-2, corrosivity category C2

Mounting information

Size of cover bolt		M8x25
Recommended tightening torque for cover bolts		24 N·m
Recommended diameter of attachment bolts	G	16 mm
Recommended tightening torque for attachment bolts		200 N·m
Initial grease fill, 20%		120 g
Initial grease fill, 40%		205 g

Included products

Grease fitting	AH 1/8-27 PTF

Compatible products

Component

Double-lip seal	2 x TFL 518

More Information

Designs and variants

- Standard housing design
- Housing variants
- Sealing solutions

Product details

- Permissible misalignment
- Typical shaft-bearing combinations
- Locating/non-locating support
- Loads
- Temperature limits
- Permissible speed
- Lubrication
- Mounting
- Condition monitoring
- Associated products
- Ordering information
- Designation system

Tools

- SKF Product select - Select and evaluate bearing
- SKF Product select - Combine bearing with housing
- SimPro Quick
- Tool and Accessory Selector for sleeves and shafts
- LubeSelect for SKF greases
- Drive-up Method Program
- Heater selection tool
- Oil Injection Method Program

Terms of use

By accessing and using this website / app owned and published by AB SKF (publ.) (556007-3495 · Gothenburg) (“SKF”), you agree to the following terms and conditions:

Warranty Disclaimer and Limitation of Liability

Although every care has been taken to assure the accuracy of the information on this website / app, SKF provides this information "AS IS" and DISCLAIMS ALL WARRANTIES, EXPRESS OR IMPLIED, INCLUDING, BUT NOT LIMITED TO, IMPLIED WARRANTIES OF MERCHANTABILITY AND FITNESS FOR A PARTICULAR PURPOSE. You acknowledge that your use of this website / app is at your sole risk, that you assume full responsibility for all costs associated with use of this website / app, and that SKF shall not be liable for any direct, incidental, consequential, or indirect damages of any kind arising out of your access to, or use of the information or software made available on this website / app.

Any warranties and representations in this website / app for SKF products or services that you purchase or use will be subject to the agreed upon terms and conditions in the contract for such product or service.

Further, for non-SKF websites / apps that are referenced in our website / app or where a hyperlink appears, SKF makes no warranties concerning the accuracy or reliability of the information in these websites / apps and assumes no responsibility for material created or published by third parties contained therein. In addition, SKF does not warrant that this website / app or these other linked websites / apps are free from viruses or other harmful elements.

Third Party Services

When viewing YouTube content via the SKF website(s) (i.e. using YouTube API Services), you agree to be bound by the YouTube Terms of Service.

Copyright

Copyright in this website / app copyright of the information and software made available on this website / app rest with SKF or its licensors. All rights are reserved. All licensed material will reference the licensor that has granted SKF the right to use the material. The information and software made available on this website / app may not be reproduced, duplicated, copied, transferred, distributed, stored, modified, downloaded or otherwise exploited for any commercial use without the prior written approval of SKF. However, it may be reproduced, stored and downloaded for use by individuals without prior written approval of SKF. Under no circumstances may this information or software be supplied to third parties.

This website /app includes certain images used under license from Shutterstock, Inc.

Trademarks and Patents

All trademarks, brand names, and corporate logos displayed on the website / app are the property of SKF or its licensors, and may not be used in any way without prior written approval by SKF. All licensed trademarks published on this website / app reference the licensor that has granted SKF the right to use the trademark. Access to this website / app does not grant to the user any license under any patents owned by or licensed to SKF.

Changes

SKF reserves the right to make changes or additions to this website / app at any time.