Pushbutton Stations – 1, 2 or 3 stations

Emergency Stop, Switched, Key Switched and Momentary pushbuttons
Installation Instructions Issue 10

06.012463/4E1005

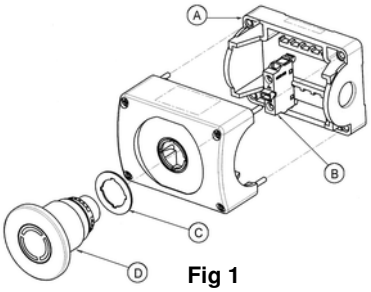

Fig 1

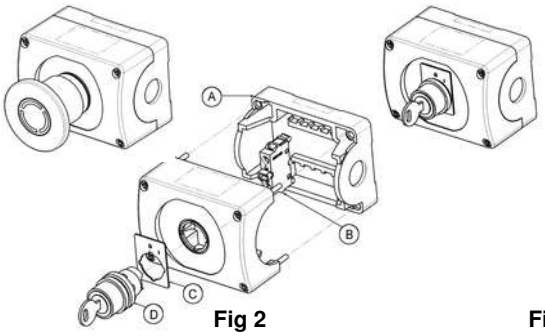

Fig 2

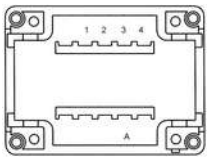

Fig 3

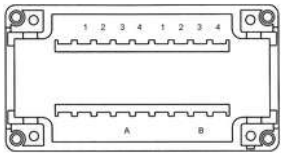

Fig 4

INSTALLATION

1. Figures 1 and 2 show an exploded view of two typical pushbutton stations.
- A - Base moulding incorporating up to 4 Contacts (see table 1). The design allows the cover to be removed without removing the contacts or wiring.
- B - Normally closed or open contact block. Additional contacts simply clip in place, observe positions as per table 1.
- C - Legend plates are located here or a spacer used if legend plate not fitted.
- D - Pushbutton.

2. Each pushbutton station is supplied with contacts as shown In Table 1. Additional contacts must be fitted in accordance with the options shown in Table 1 and positions shown in Figures 3 and 4, (3 station not shown).
The contacts simply snap into position or are lightly levered out using a small flat screwdriver.

3. **IMPORTANT** – Position 4 must never be used with a single type contact. If 4 contacts are required then a special double contact must be used in positions 3 and 4. Part number shown in table 1.

Pushbutton Selection Table 1.		Factory Fitted Contact "N.O" or "N.C" depending on pushbutton type Additional contacts. "✔" can be N.O or N.C. "✖" means do not fit.											
Order Code	**Description**	1	2	3	4	1	2	3	4	1	2	3	4
1GO	Start/Green	✔	**n.o**	✔	✖								
1RC	Stop/Red	✔	**n.c**	✔	✖								
1RSC *	Mushroom Head 30mm (twist release)	✖	**n.c**	**n.o**	✖	* *Cannot accept additional contacts*							
1RSC-EN	Emergency Stop 40mm (stay put) – to IEC 60947-5-5	✔	**n.c**	✔	✖								
1RMSC50	Mushroom Head 60mm (twist release)	✔	**n.c**	✔	✖								
1RMSKC *	Emergency Stop (key release) – to IEC 60947-5-5	✖	**n.c**	**n.o**	✖	* *Cannot accept additional contacts*							
1H2O-I	Two position switch	**n.o**	✖	✔	✖								
1K2 O-I	Two position key switch (key removable)	**n.o**	✖	✔	✖								
1H 3 I-O-II	Three position switch	**n.o**	✖	**n.o**	✖								
2GORC	Start/Green and Stop/Red	✔	**n.o**	✔	✖	✔	**n.c**	✔	✖				
2ORSC-EN	Start/Green & Red/Emergency stop 40mm EN418	✔	**n.o**	✔	✖	✔	**n.c**	✔	✖				
3GOGORC	Forward/Green – Stop/Red – Reverse/Green	✔	**n.o**	✔	✖	✔	**n.c**	✔	✖	✔	**n.o**	✔	✖
3GOGORSC –EN	Two Green and Red/Emergency Stop 40mm (twist release) – to EN418	✔	**n.o**	✔	✖	✔	**n.c**	✔	✖	✔	**n.o**	✔	✖
1RSC-ENSS	Emergency Stop 40mm (stay put) – to EN418 Stainless Steel Enclosure. *Rear mounted contacts*	✔	**n.c**	✔	✖	*Note – Only use rear mounted contacts.* N.O part No **1NOR**, N.C part No **1NCR**							
1NO	Replacement contact block n/o	✔	✔	✔	✖	✔	✔	✔	✖	✔	✔	✔	✖
1NC	Replacement conact block n/c	✔	✔	✔	✖	✔	✔	✔	✖	✔	✔	✔	✖
MCB-20B	Replacement 2 pole contact block n/o see note 3	✔		✔		✔		✔		✔		✔	
MCB-02B	Replacement 2 pole contact block n.c see note 3	✔		✔		✔		✔		✔		✔	

Contact Block Ratings	**UL/CSA NEMA**	**IEC947-5-1**	**DC Utilisation**
Rated Insulation Voltage	600V	690V	**Category DC13**
Rated Thermal Current	10A	10A	
Rated operational Current	(120V) 6A	(120V) 8A	(24V DC) 5A
" " "	(240V) 3A	(230V) 6A	(125V DC) 1.1A
" " "	(480V) 1.5A	(400V) 4A	(250V DC) 0.55A
" " "	(600V) 1.2A	(690V) 2A	
* Rated Insulation Voltage	250V	300V	(24V DC) 0.3A
* Rated Thermal Current	2.5A	5A	(125V DC) 0.2A

Terminals	
Connectable areas	Min 1 x 0.5mm^2
	Max. 2 x 2.5mm^2
Recommended torque * Compact Em-Stop	0.9 Nm 0.8 Nm
* Connectable areas (Compact Em-stop)	Min 1 x 0.5mm^2
	Max 2 x 1.5mm^2

Council of European Communities Directives: The products in this publication conform to relevant EEC Directives and EN Standards. Installation and use of such products must be carried out by competent, properly trained personnel, complying with any instructions supplied by ABB. Liability for improper incorporation, assembly, use, processing, storing or handling of goods remains the sole responsibility of the individual, or company carrying out such work.
This publication is for information only. Whilst every care has been taken in the preparation of this leaflet, no liability is accepted for any consequence of its use. No licence to use any patent should be assumed. All dimensions are approximate only and subject to change without notice, as are other technical features resulting from continual development and improvement.

ABB Limited Tower Court, Foleshill Enterprise Park,
Courtaulds Way, Coventry. CV6 5NX
Tel: 02476 368500
Fax: 02476 364499