7000 series

Rocker and paddle switches

Distinctive features

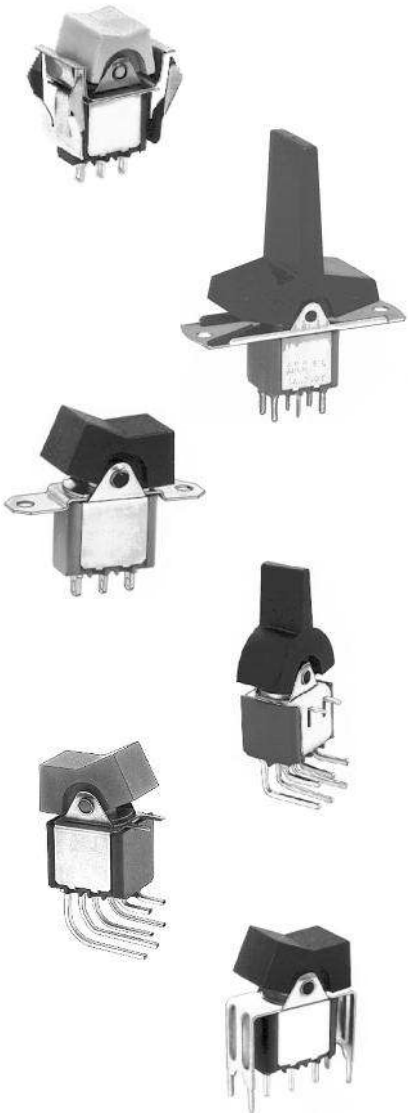

- **Wide variety of actuators**
  Rockers and paddles in different sizes
  Available in10 different colours
  Two bezel types

- **4 terminal types**
  Solder lugs
  Quick-connect terminals
  Straight or right angle PC terminals

- **Many mounting styles for panel or PCB**
  Snap-in
  By plate and screw
  PCB mounting with or without bracket

- **4 contact materials**
  Silver and gold plated silver
  Gold plated and silver plated brass

- **8 electrical functions, maintained or momentary**

- **UL and CSA approved - for VDE refer to 57000**

D

The company reserves the right to change specifications without notice.

ELECTRICAL SPECIFICATIONS

- Current/voltage rating with resistive load :

Contact	Maximum	Minimum	Level *
Silver A	4A 30VDC	50mA 10VDC	III and IV
Silver, gold plated AD	4A 30VDC Gold plating withstands up to 100mA 30VDC.	10mA 50mV 10µA 5V	I to IV
Brass, gold plated CD	0,4 VA at 20VAC or DC	10mA 50mV 10µA 5V	I and II

- For inductive, lamp or capacitive loads, consult factory.
- Initial contact resistance : 10 mΩ
- Insulation resistance : 1.000 MΩ min. at 500VDC
- Dielectric strength :
  1.000 Vrms 50 Hz min. between terminals
  1.500 Vrms 50 Hz min. between poles
  1.500 Vrms 50 Hz min. between terminals and frame
- Contact bounce : 2 ms max.
- Electrical life : 50.000 cycles at full load

* For details, see technical information, end of catalogue.

MATERIALS

- Case : diallylphthalate (DAP) or high temperature plastic material (UL94-V0)
- Actuator : polyamide
- Housing : stainless steel or steel tin plated
- Bracket : steel, tin plated
- Contacts
  A : silver
  AD : silver, gold plated
  CD : brass, gold plated
- Terminal seal : epoxy

GENERAL SPECIFICATIONS

- Low level or mechanical life : 100.000 cycles
- Panel thickness : 1 (.039) to 2,5 mm(.098)
- Operating temperature : -40°C to +85°C

AGENCY APPROVALS

3A 250VAC
6A 125VAC

For VDE, refer to 57000 series.

Availability : consult factory for details of approved models.

Marking : to order switches marked UL or CSA, complete appropriate box of ordering format.

D

7000 series

Rocker and paddle switches

Overview

MODEL STRUCTURE

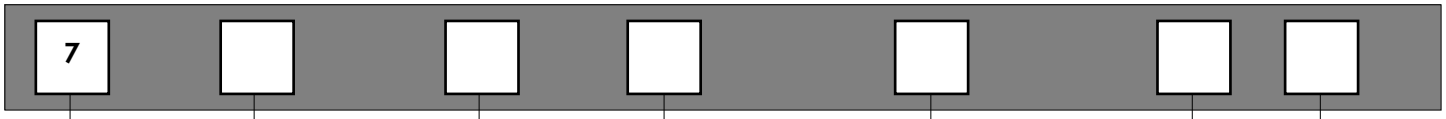

SERIES

Number of poles

3	Single pole
4	Double pole

Consult factory for three and four pole models.

Terminals

Blank	Solder lugs or straight PC depending on model
W	Right angle, horizontal mounting (7900 switches)
WW	Right angle, vertical mounting (7000 switches)
Y }	
Y4 }	Bracket mounting
Y6 }	(7000 switches)
Y7 }	
Z	Quick-connect (7200 switches)

Mounting plate

N	Mounting with small plate

Terminals-mounting

0	Right angle terminals or straight PC terminals with bracket
2	Straight PC or quick-connect terminals, 4,7 (.185) terminal spacing, snap-in mounting
4	Straight PC terminals, 4 (.157) terminal spacing, snap-in mounting
6	Solder lug terminals, snap-in mounting
7	Solder lug terminals, panel mounting
9	Straight PC or quick-connect terminals, 4,7 (.185) terminal spacing, panel mounting Right angle terminals

Electrical functions

6	ON	-	ON
9	ON	OFF	ON
7	MOM	OFF	MOM
8	ON	OFF	MOM
2	ON	-	MOM
4	ON	ON	ON
	ON	ON	MOM Δ
	MOM	ON	MOM Δ

Function 4
. Must not have blank in "connections" box.
. Δ Must not have blank in "momentary" box.

Connections for function 4

TH (standard)
CT (reversed)

. For functions 4, 41R, 42R
. Leave blank for all other functions.

Momentary for function 4

1R	ON	ON	MOM
2R	MOM	ON	MOM

Leave blank for other functions.

ABOUT THIS SERIES
On the following pages, you will find successively :
- model structure of switches
- options in the same order as in above chart

Dimensions : first dimensions are in mm while inches are shown as bracketed numbers.

NOTICE : please note that not all combinations of above numbers are available.
Refer to the following pages for further information.

Contact materials

A	Silver
AD	Silver, gold plated
CD	Brass, gold plated

Special options

Blank	No special requirement
X653	Vertical right angle with stand-off plate

Other, see following pages.

Actuators

Rockers

U530	Large
U620	Medium
U730	Small
U830	Medium
U1010	Large

Paddles

U490	Large
U610	Narrow
U700	Broad

Sealing

Blank	No sealing
B	Epoxy sealed terminals

Approvals

UL
CSA

Availability : Consult factory for details of approved models.

For VDE, refer to 57000.

Bezels - Mounting accessories

Bezels for rocker U730 or paddle U700

U1200	
U1210	For LED

Accessories for panel mounting models

U543	Spacer + nut + screw
U1022	Spacer + nut + screw + washer

Packaging unit : 25 pieces.

7000 series

Rocker and paddle switches

Snap-in mounting : 7600 - 7200 - 7400

MODEL STRUCTURE

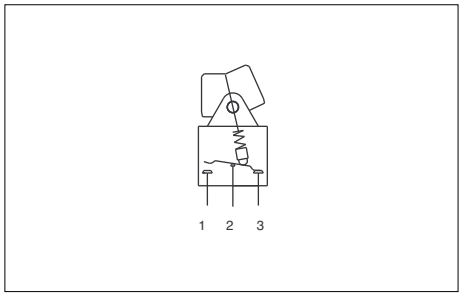

- Solder lug or straight PC terminals
- Epoxy sealing standard on models with straight PC terminals

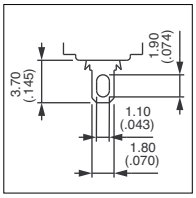

MODEL STRUCTURE

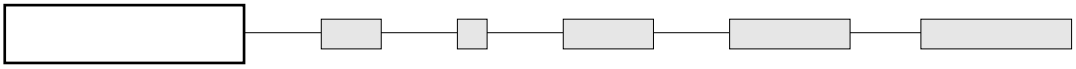

Shown with rocker U730 and bezel U1200

D

Solder lug terminals : 7600



		III	II	I
		2-3		1-2
		5-6		4-5
Single pole	Double pole			
7636	**7646**	ON	-	ON
7639	**7649**	ON	OFF	ON
7637	**7647**	MOM	OFF	MOM
7638	**7648**	ON	OFF	MOM
7632	**7642**	ON	-	MOM
	7644*	ON	ON	ON
	7644 1R*	ON	ON	MOM
	7644 2R*	MOM	ON	MOM

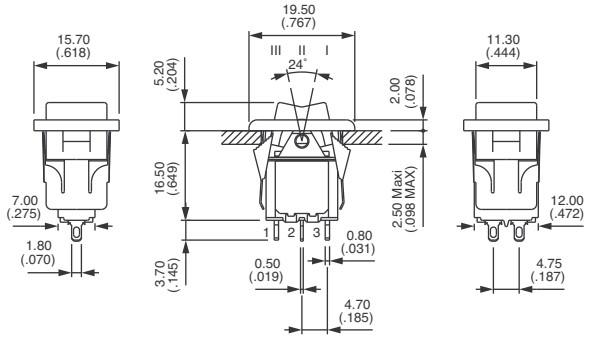

Straight PC terminals - spacing 4,7 (.185) : 7200



		III	II	I
		2-3		1-2
		5-6		4-5
Single pole	Double pole			
7236 B	**7246 B**	ON	-	ON
7239 B	**7249 B**	ON	OFF	ON
7237 B	**7247 B**	MOM	OFF	MOM
7238 B	**7248 B**	ON	OFF	MOM
7232 B	**7242 B**	ON	-	MOM
	7244 B*	ON	ON	ON
	7244 1R B*	ON	ON	MOM
	7244 2R B*	MOM	ON	MOM

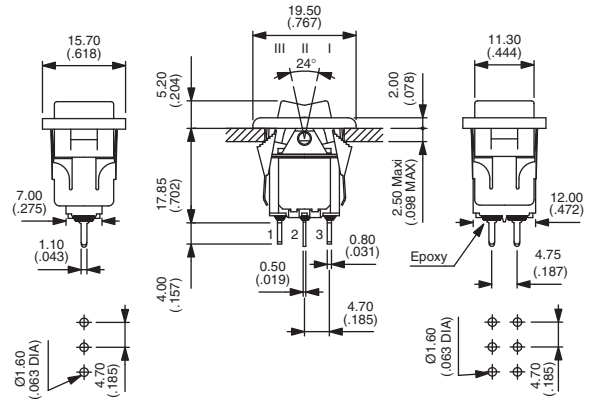

Straight PC terminals - spacing 4 (.157) : 7400



		III	II	I
		2-3		1-2
		5-6		4-5
Single pole	Double pole			
7436 B	**7446 B**	ON	-	ON
7439 B	**7449 B**	ON	OFF	ON
7437 B	**7447 B**	MOM	OFF	MOM
7438 B	**7448 B**	ON	OFF	MOM
7432 B	**7442 B**	ON	-	MOM
	7444 B*	ON	ON	ON
	7444 1R B*	ON	ON	MOM
	7444 2R B*	MOM	ON	MOM

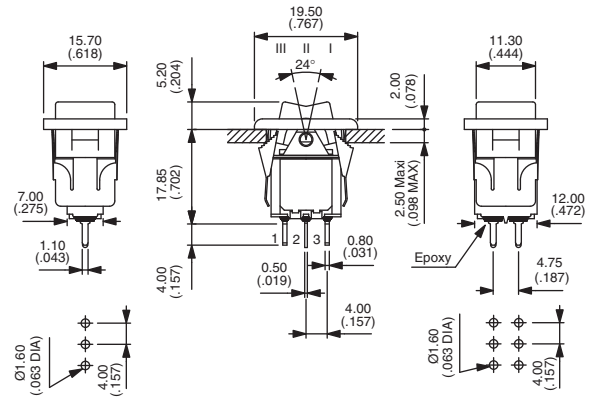

* Function 4 : SP in DP case - specify CT or TH connections, see end of catalogue.

7000 series

Rocker and paddle switches

Snap-in mounting : 7200Z

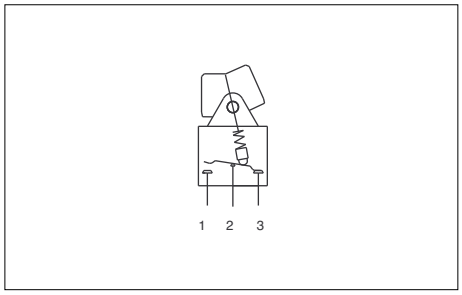

• Quick-connect terminals

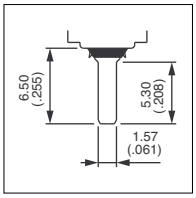

MODEL STRUCTURE

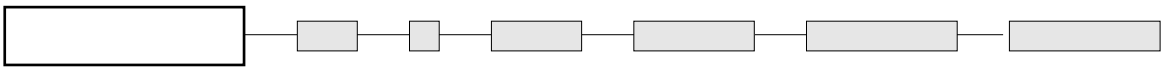

Shown with rocker U730 and bezel U1200

Quick-connect terminals : 7200Z



Single pole	Double pole	III	II	I
		2-3		1-2
		5-6		4-5
7236Z	**7246Z**	ON	-	ON
7239Z	**7249Z**	ON	OFF	ON
7237Z	**7247Z**	MOM	OFF	MOM
7238Z	**7248Z**	ON	OFF	MOM
7232Z	**7242Z**	ON	-	MOM
	7244Z*	ON	ON	ON
	7244Z 1R*	ON	ON	MOM
	7244Z 2R*	MOM	ON	MOM

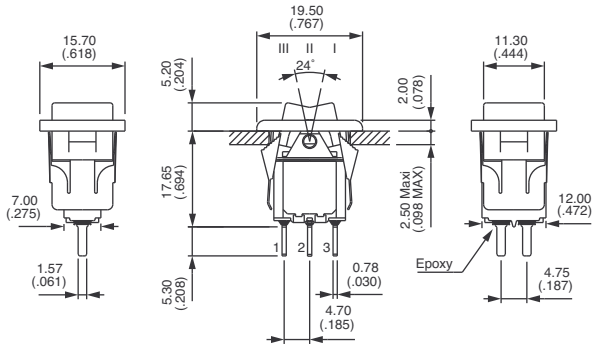

* Function 4 : SP in DP case - specify CT or TH connections, see end of catalogue.

PANEL CUT-OUT

7600 - 7200 - 7400 - 7200Z

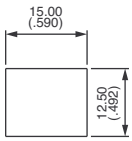

With or without bezel **U1200**

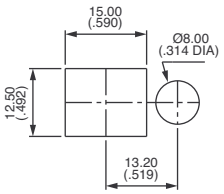

With bezel **U1210**

D

7000 series

Rocker and paddle switches

Panel mounting : 7700 - 7900

MODEL STRUCTURE

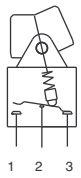

- Large rocker or paddle
- Solder lug or straight PC terminals
- Quick-connect terminals : on request
- Epoxy sealing standard on models with straight PC terminals

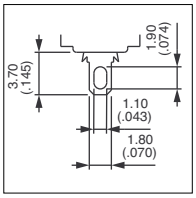

MODEL STRUCTURE

Shown with rocker U530

Solder lug terminals : 7700



Single pole	Double pole	III	II	I
		2-3		1-2
		5-6		4-5
7736	**7746**	ON	-	ON
7739	**7749**	ON	OFF	ON
7737	**7747**	MOM	OFF	MOM
7738	**7748**	ON	OFF	MOM
7732	**7742**	ON	-	MOM
	7744*	ON	ON	ON
	7744 1R*	ON	ON	MOM
	7744 2R*	MOM	ON	MOM

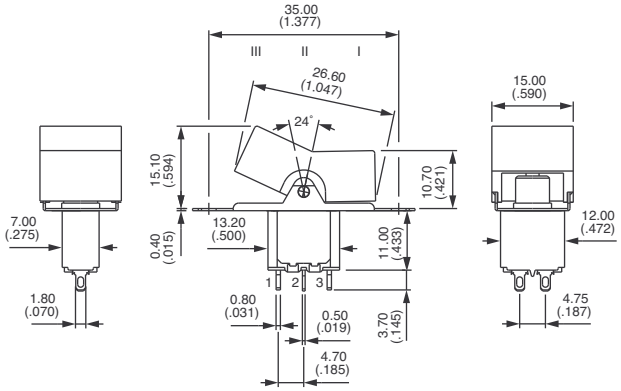

Straight PC terminals : 7900



Single pole	Double pole	III	II	I
		2-3		1-2
		5-6		4-5
7936 B	**7946 B**	ON	-	ON
7939 B	**7949 B**	ON	OFF	ON
7937 B	**7947 B**	MOM	OFF	MOM
7938 B	**7948 B**	ON	OFF	MOM
7932 B	**7942 B**	ON	-	MOM
	7944 B*	ON	ON	ON
	7944 1R B*	ON	ON	MOM
	7944 2R B*	MOM	ON	MOM

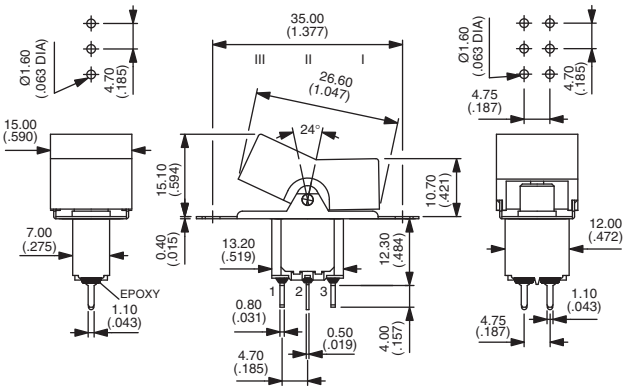

* Function 4 : SP in DP case - specify CT or TH connections, see end of catalogue.

PANEL CUT-OUT

7700 - 7900

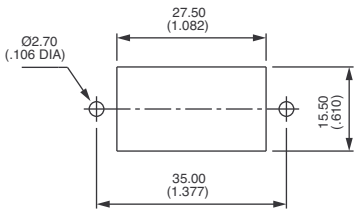

MODEL STRUCTURE

7000 series

Rocker and paddle switches

Panel mounting : 7700N - 7900N

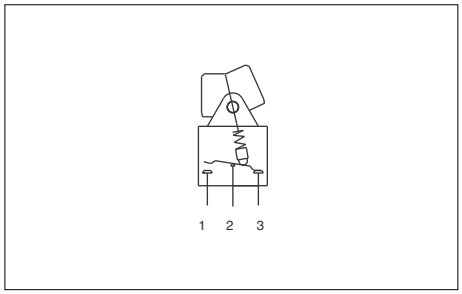

- Small or medium rocker or paddle
- Solder lug or straight PC terminals
- Quick-connect terminals : on request
- Epoxy sealing standard on models with straight PC terminals

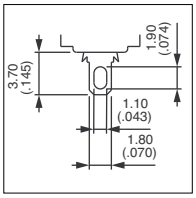

MODEL STRUCTURE

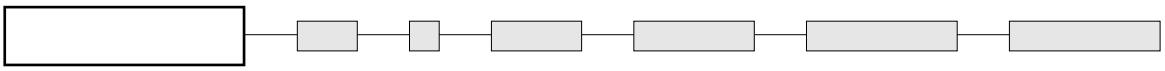

Shown with rocker U620

Solder lug terminals : 7700N



Single pole	Double pole	III	II	I
		2-3		1-2
		5-6		4-5
7736N	**7746N**	ON	-	ON
7739N	**7749N**	ON	OFF	ON
7737N	**7747N**	MOM	OFF	MOM
7738N	**7748N**	ON	OFF	MOM
7732N	**7742N**	ON	-	MOM
	7744N*	ON	ON	ON
	7744N 1R*	ON	ON	MOM
	7744N 2R*	MOM	ON	MOM

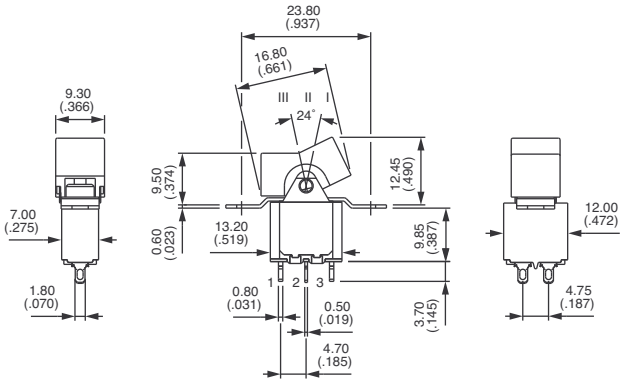

Straight PC terminals : 7900N



Single pole	Double pole	III	II	I
		2-3		1-2
		5-6		4-5
7936N B	**7946N B**	ON	-	ON
7939N B	**7949N B**	ON	OFF	ON
7937N B	**7947N B**	MOM	OFF	MOM
7938N B	**7948N B**	ON	OFF	MOM
7932N B	**7942N B**	ON	-	MOM
	7944N B*	ON	ON	ON
	7944N 1R B*	ON	ON	MOM
	7944N 2R B*	MOM	ON	MOM

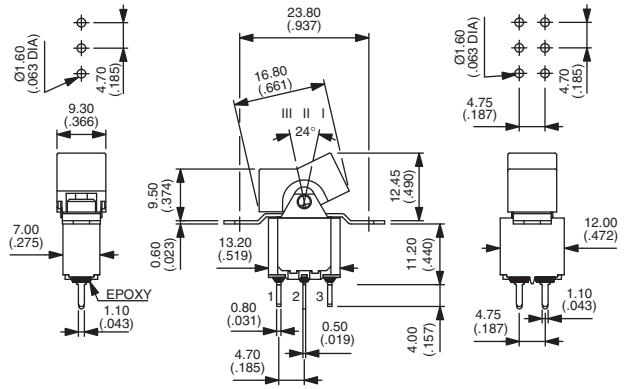

* Function 4 : SP in DP case - specify CT or TH connections, see end of catalogue.

PANEL CUT-OUT

7700N - 7900N

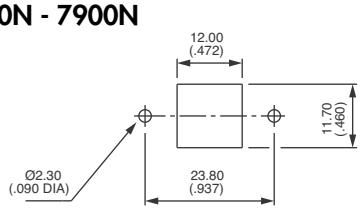

With small rocker **U730** or small paddle **U700**

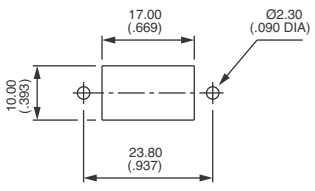

With medium rocker **U620** or medium paddle **U610**

D

7000 series

Rocker and paddle switches

Right angle terminals - horizontal : 7900W

MODEL STRUCTURE

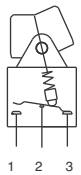

MODEL STRUCTURE

Shown with rocker U620

Single pole



	III	II	I
	2-3		1-2
7936W	ON	-	ON
7939W	ON	OFF	ON
7937W	MOM	OFF	MOM
7938W**	ON	OFF	MOM
7932W**	ON	-	MOM

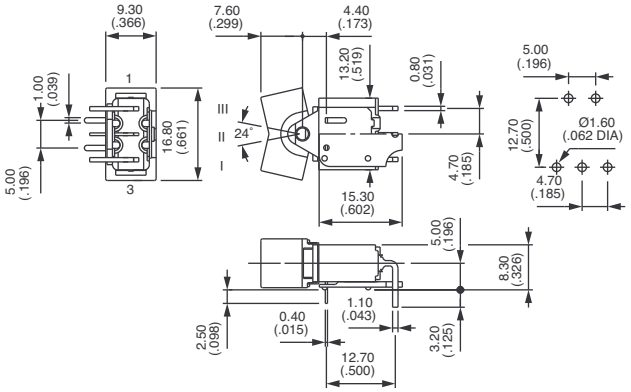

Double pole



	III	II	I
	2-3		1-2
	5-6		4-5
7946W	ON	-	ON
7949W	ON	OFF	ON
7947W	MOM	OFF	MOM
7948W**	ON	OFF	MOM
7942W**	ON	-	MOM
7944W*	ON	ON	ON
7944W 1R*	ON	ON	MOM
7944W 2R*	MOM	ON	MOM

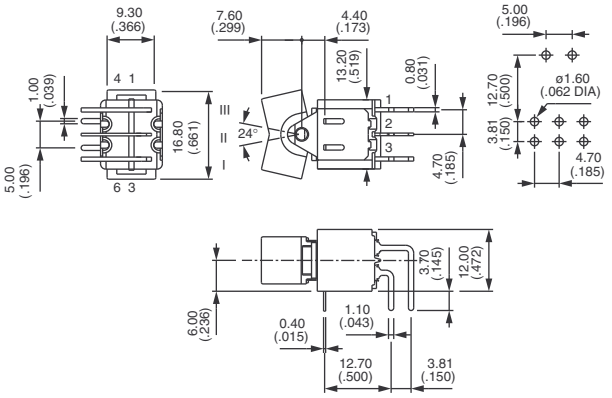

* Function 4 : SP in DP case - specify CT or TH connections, see end of catalogue.
** Functions 2 and 8 : standard connection (CT) shown on drawing - reversed connection available. Consult factory.

PANEL CUT-OUT

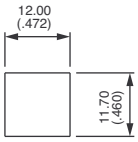

With small rocker **U730** or small paddle **U700**

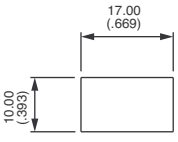

With medium rocker **U620** or medium paddle **U610**

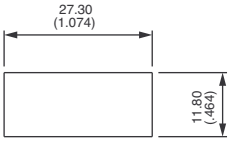

With large rocker **U1010**

7000 series

Rocker and paddle switches

Right angle terminals - vertical : 7000WW

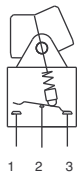

MODEL STRUCTURE

Shown with rocker U830

Single pole



	III	II	I
	2-3		1-2
7036WW	ON	-	ON
7039WW	ON	OFF	ON
7037WW	MOM	OFF	MOM
7038WW**	ON	OFF	MOM
7032WW**	ON	-	MOM

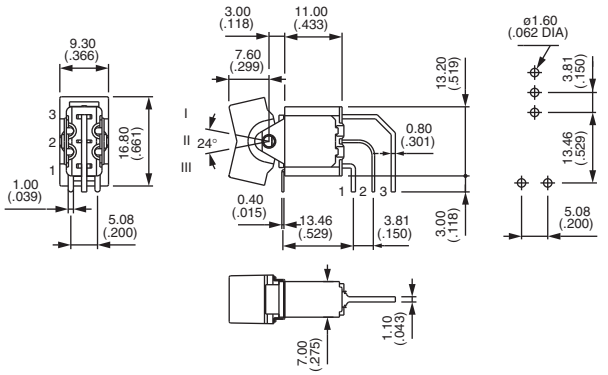

Double pole

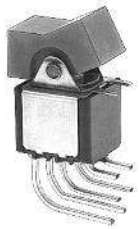

	III	II	I
	2-3		1-2
	5-6		4-5
7046WW	ON	-	ON
7049WW	ON	OFF	ON
7047WW	MOM	OFF	MOM
7048WW**	ON	OFF	MOM
7042WW**	ON	-	MOM
7044WW*	ON	ON	ON
7044WW 1R*	ON	ON	MOM
7044WW 2R*	MOM	ON	MOM

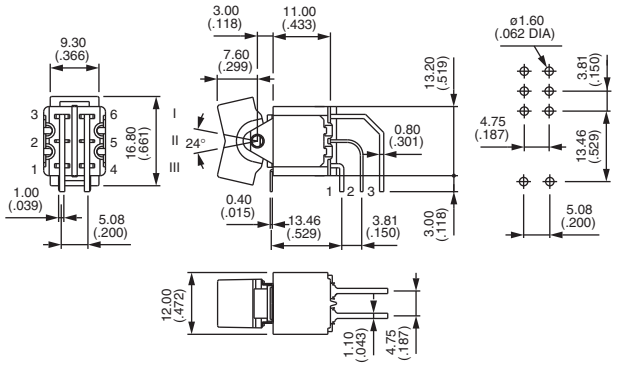

* Function 4 :SP in DP case - specify CT or TH connections, see end of catalogue.
** Functions 2 and 8 : standard connection (CT) shown on drawing - reversed connection available. Consult factory.

PANEL CUT-OUT

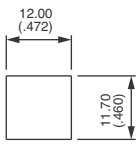

With small rocker **U730**

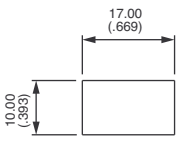

With medium rocker **U830**

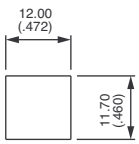

With broad paddle **U700**

7000 series

Rocker and paddle switches

Straight PC terminals - bracket mounting : 7000Y

MODEL STRUCTURE

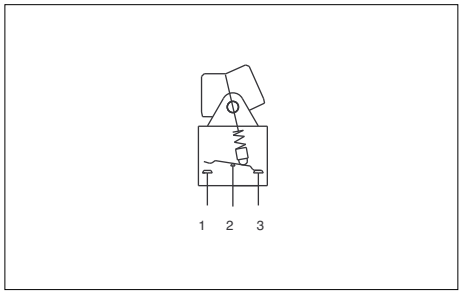

Brackets reduce mechanical stress on solder joints and increase the resistance to vibrations.

- Epoxy sealed terminals standard (B included in model structure)

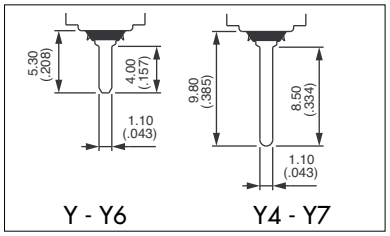

MODEL STRUCTURE

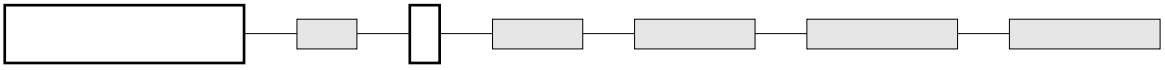

Shown with rocker U620

Short bracket - width 15,75 (.620) - single pole : 7030Y



	III	II	I
	2-3		1-2
	5-6		4-5
7036Y B	ON	-	ON
7039Y B	ON	OFF	ON
7037Y B	MOM	OFF	MOM
7038Y B	ON	OFF	MOM
7032Y B	ON	-	MOM

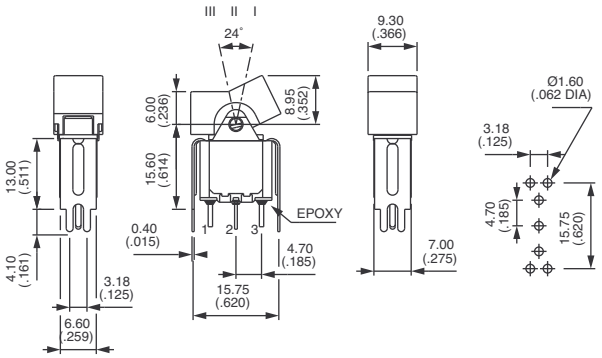

Short bracket - width 15,75 (.620) - double pole : 7040Y



	III	II	I
	2-3		1-2
	5-6		4-5
7046Y B	ON	-	ON
7049Y B	ON	OFF	ON
7047Y B	MOM	OFF	MOM
7048Y B	ON	OFF	MOM
7042Y B	ON	-	MOM
7044Y* B	ON	ON	ON
7044Y 1R* B	ON	ON	MOM
7044Y 2R* B	MOM	ON	MOM

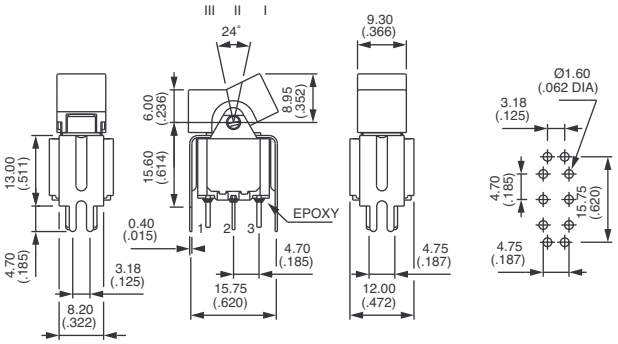

* Function 4 : SP in DP case - specify CT or TH connections, see end of catalogue.

MODEL STRUCTURE

7000 series

Rocker and paddle switches

Straight PC terminals - bracket mounting : 7000Y4 - Y6 - Y7

Tall bracket - width 15,75 (.620) : 7000Y4



		III	II	I
		2-3		1-2
		5-6		4-5
Single pole	Double pole			
7036Y4 B	**7046Y4 B**	ON	-	ON
7039Y4 B	**7049Y4 B**	ON	OFF	ON
7037Y4 B	**7047Y4 B**	MOM	OFF	MOM
7038Y4 B	**7048Y4 B**	ON	OFF	MOM
7032Y4 B	**7042Y4 B**	ON	-	MOM
	7044Y4* B	ON	ON	ON
	7044Y4 1R* B	ON	ON	MOM
	7044Y4 2R* B	MOM	ON	MOM

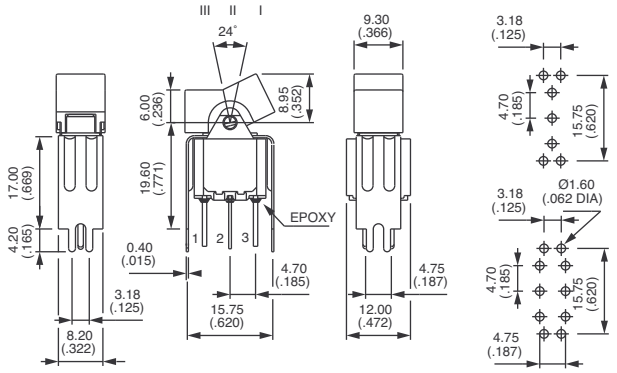

Short bracket - width 19,05 (.750) : 7000Y6



		III	II	I
		2-3		1-2
		5-6		4-5
Single pole	Double pole			
7036Y6 B	**7046Y6 B**	ON	-	ON
7039Y6 B	**7049Y6 B**	ON	OFF	ON
7037Y6 B	**7047Y6 B**	MOM	OFF	MOM
7038Y6 B	**7048Y6 B**	ON	OFF	MOM
7032Y6 B	**7042Y6 B**	ON	-	MOM
	7044Y6* B	ON	ON	ON
	7044Y6 1R* B	ON	ON	MOM
	7044Y6 2R* B	MOM	ON	MOM

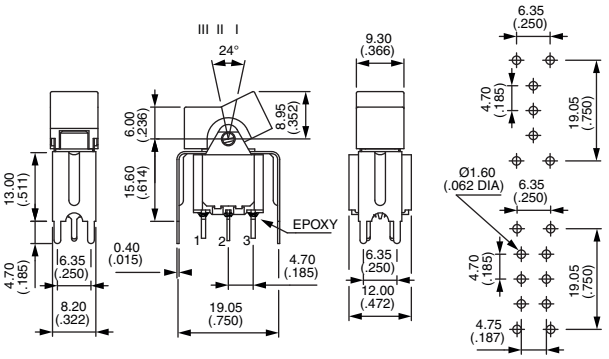

Tall bracket - width 19,05 (.750) : 7000Y7

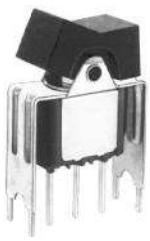

		III	II	I
		2-3		1-2
		5-6		4-5
Single pole	Double pole			
7036Y7 B	**7046Y7 B**	ON	-	ON
7039Y7 B	**7049Y7 B**	ON	OFF	ON
7037Y7 B	**7047Y7 B**	MOM	OFF	MOM
7038Y7 B	**7048Y7 B**	ON	OFF	MOM
7032Y7 B	**7042Y7 B**	ON	-	MOM
	7044Y7* B	ON	ON	ON
	7044Y7 1R* B	ON	ON	MOM
	7044Y7 2R* B	MOM	ON	MOM

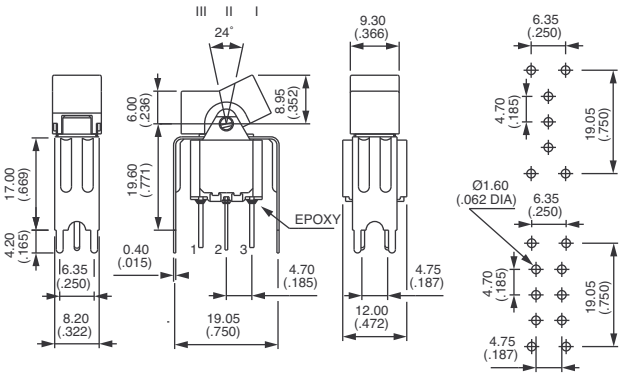

* Function 4 :SP in DP case - specify CT or TH connections, see end of catalogue.

PANEL CUT-OUT

7000Y - Y4 - Y6 - Y7

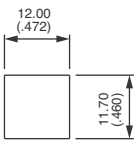

With small rocker **U730**
or small paddle **U700**

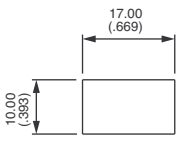

With medium rocker **U620**
or medium paddle **U610**

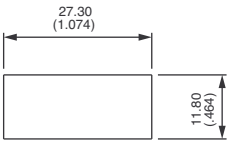

With large rocker **U1010**

D

7000 series

Rocker and paddle switches

OPTIONS

CONTACT MATERIALS

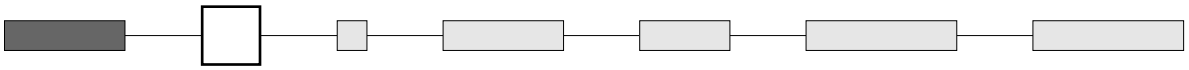

A Silver
AD Silver, gold plated
CD Brass, gold plated

SEALING

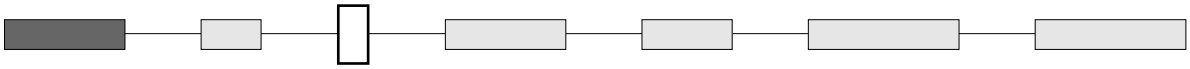

Blank No sealing

B Epoxy sealed terminals



D

SPECIAL OPTIONS

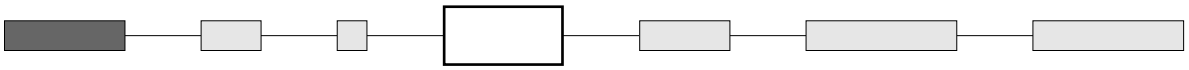

Blank No special requirement

X653 Vertical right angle with stand-off plate

Shown with rocker U620



		III	II	I
		2-3		1-2
		5-6		4-5
Single pole	Double pole			
7036WW X653	**7046WW X653**	ON	-	ON
7039WW X653	**7049WW X653**	ON	OFF	ON
7037WW X653	**7047WW X653**	MOM	OFF	MOM
7038WW X653	**7048WW X653****	ON	OFF	MOM
7032WW X653	**7042WW X653****	ON	-	MOM
	7044WW X653*	ON	ON	ON
	7044 1RWW X653*	ON	ON	MOM
	7044 2RWW X653*	MOM	ON	MOM

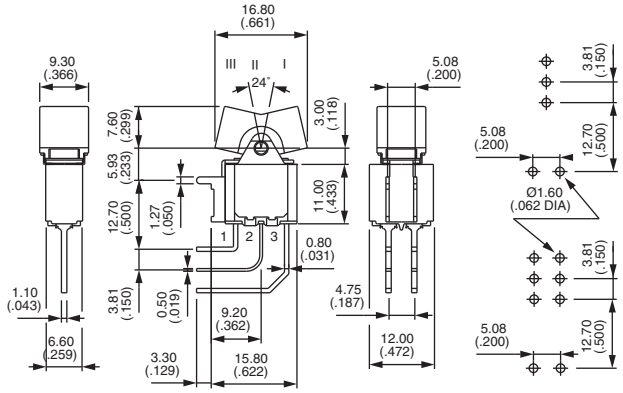

* Function 4 : SP in DP case - specify CT or TH connections, see end of catalogue.
** Functions 2 and 8 : reversed connection available. Consult factory.

Actuators for X653 : small rocker U730 and medium rocker U620, broad paddle U700 and narrow paddle U610.

X601 Silver plated brass contacts
Current voltage rating for an electrical life of 20.000 cycles : 0,5A 30VDC
Minimum quantity : 5.000 pieces per model and shipment.

AGENCY APPROVALS

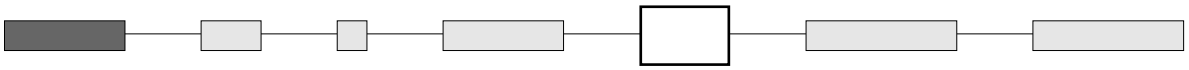

UL
CSA

All standard models

Availability : consult factory for details of approved combinations or options.

Marking : to order switches marked UL or CSA, complete above box with desired approvals in this order, without space (ex. ULCSA). Blank : no agency approval required.

VDE (with UL & CSA) Refer to **57000** series on the following pages.

ACTUATORS

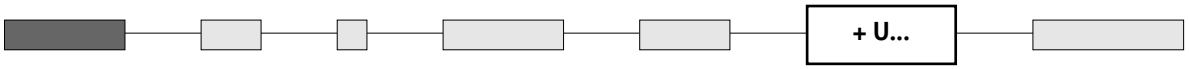

For snap-in mounting models : 7600 - 7200 - 7400 - 7200Z

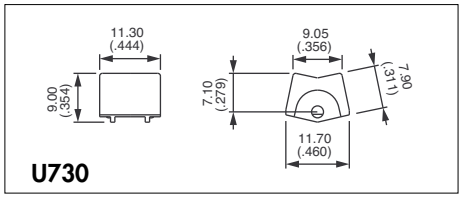

Small rocker

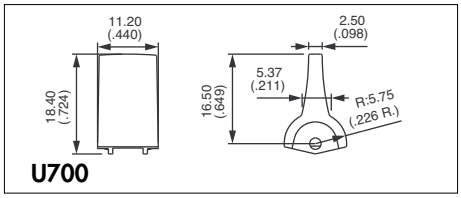

Broad paddle

Actuator colours

Replace last "0" by number

1	blue
1/4	dark blue
2	black
3	green
4	grey
5	yellow
6	red
7	ivory
7/1	white
9	orange

For 7700 and 7900 models

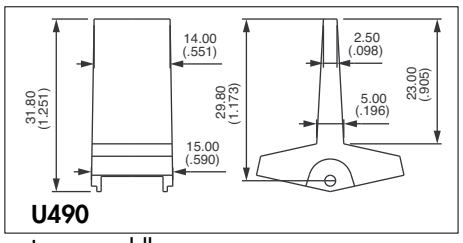

Large paddle

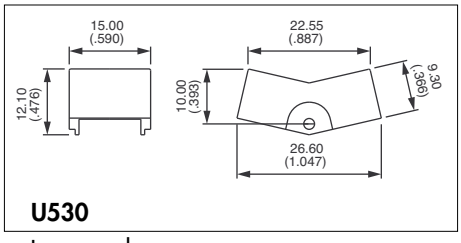

Large rocker

For 7700N - 7900N - 7900W - 7000WWX653 and 7000Y models

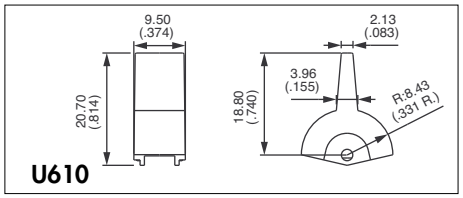

Narrow paddle

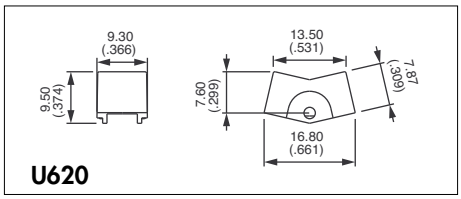

Medium rocker

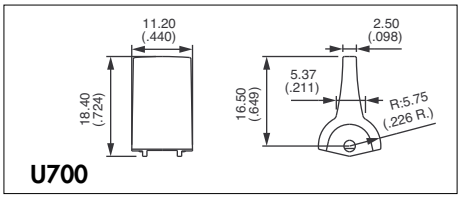

Broad paddle

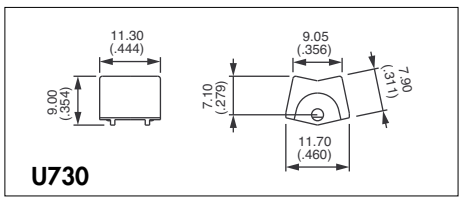

Small rocker

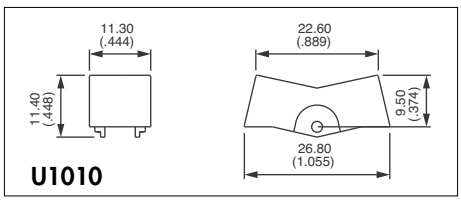

Large rocker
For 7900W, available on DP only.

ACTUATORS (continued)

For 7000WW models

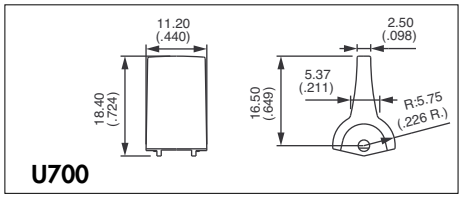

U700

Broad paddle

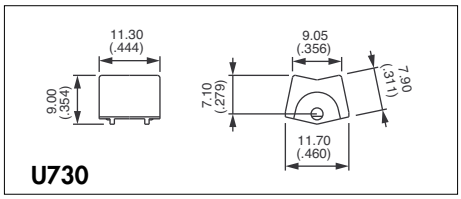

U730

Small rocker

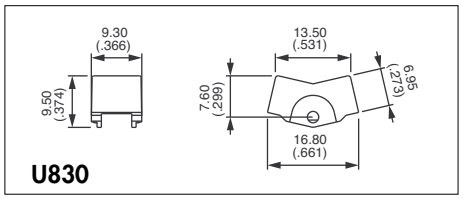

U830

Medium rocker

Actuator colours

Replace last "0" by number

1	blue
1/4	dark blue
2	black
3	green
4	grey
5	yellow
6	red
7	ivory
7/1	white
9	orange

BEZELS - MOUNTING ACCESSORIES

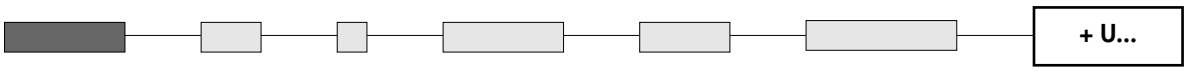

Bezels for paddle U700 and rocker U730

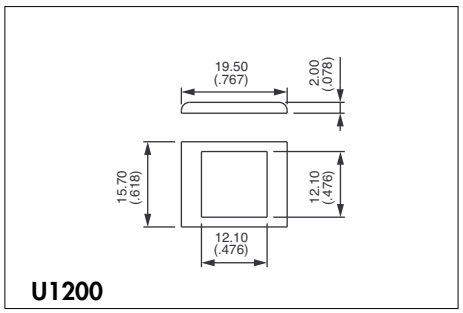

U1200

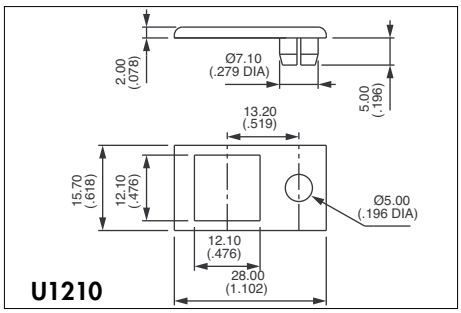

U1210

For LED Ø 5 (.196) - not supplied

Bezel colours

Replace last "0" by number

1	blue
1/4	dark blue
2	black
3	green
4	grey
5	yellow
6	red
7	ivory
7/1	white
9	orange

STANDARD PANEL MOUNTING

Panel thickness with bezel 1 to 2,5 mm (.039 to .098)

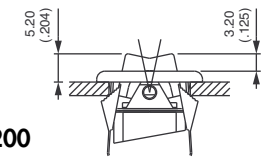

U730 + U1200

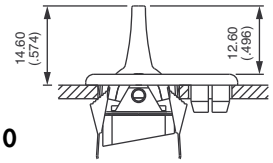

U700 + U1210

Mounting accessories

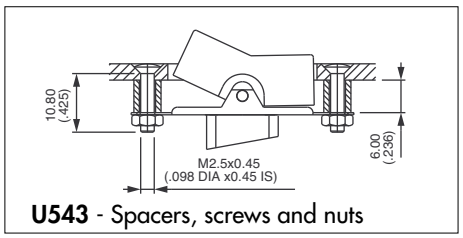

U543 - Spacers, screws and nuts

For rocker U530 or paddle U490

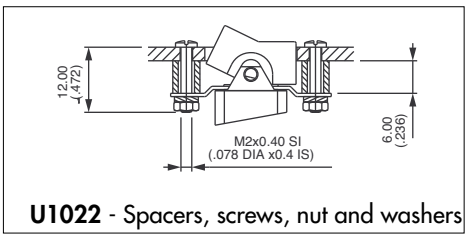

U1022 - Spacers, screws, nut and washers

For rockers U620 or U730
For paddles U610 or U700