E33706

Mounting set for LW2XXX

MOUNTING SET/LW/G1

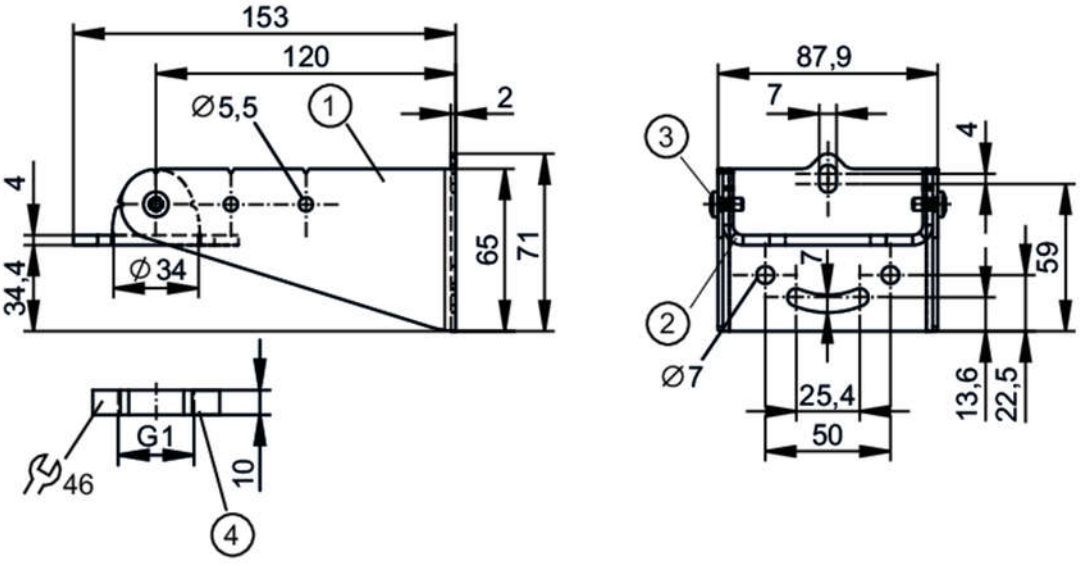

1 wall bracket
2 threaded plate
3 screws M5 x 10 (2x)
4 fixing nut G1

Application		
Design		for LW2xxx sensors
Mechanical data		
Weight	[g]	562.9
Materials		stainless steel (1.4404 / 316L)
Sensor connection		G 1
Accessories		
Items supplied		wall and ceiling bracket
		Lock nut
Remarks		
Pack quantity		1 pcs.