MURR ELEKTRONIK
stay connected

M8 FEMALE 90° F&B

PVC 3x0.25 GRAY, 10m

Female 90°
M8, 3-pole
Stainless steel 1.4404 (V4A)
with cable sleeves
Plastic housings with good resistance against chemicals and oils.
The resistance to aggressive media should be individually tested for your application. Further details on request.
Further cable lengths on request.

Link to Product

Illustration

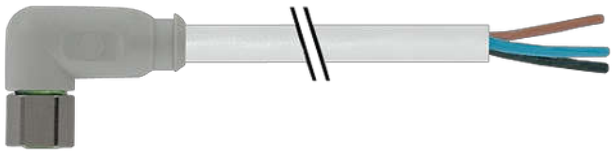

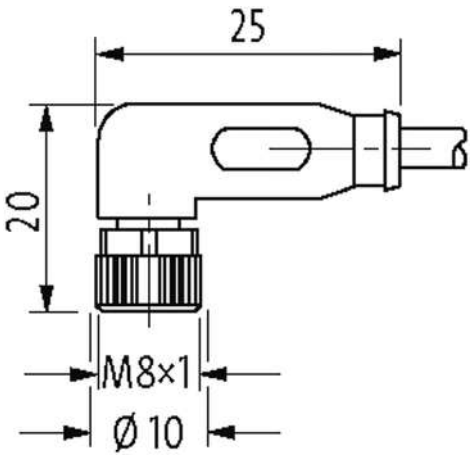

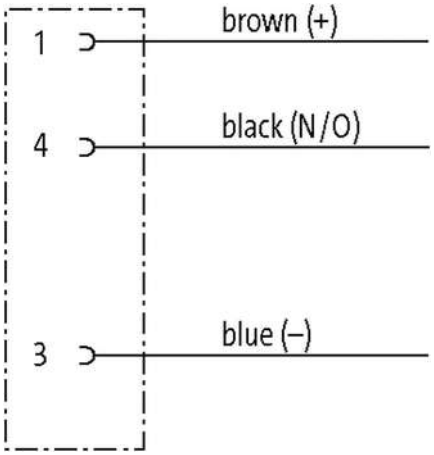

Product may differ from Image

Approvals

The information in this brochure has been compiled with the utmost care.
Liability for the correctness completeness and topicality of the information is restricted to gross negligence. Version: 11/20

MURR ELEKTRONIK
stay connected

Form	
Form	08081
General data	
Mounting method	inserted, tightened
Material (contact)	Copper alloy
Material (contact surface)	Au
Material (gasket)	FKM
Pollution Degree	3
Stripping length (jacket)	20 mm
Temperature range	-25...+85 °C, depending on cable quality
Cables	
Cable identification	210
Cable Type	1 (PVC)
Approval (cable)	UL (AWM-Style 2464/1731), CSA
Cable weight [g/m]	29,37
Material (wire)	Cu wire, bare
Resistor (core)	max. 79 Ω/km (20 °C)
Single wire Ø (core)	0.15 mm
Construction (core)	14× 0.15 mm (multi-strand wire class 5)
Diameter (core)	3× 0.25 mm²
AWG	similar to AWG 24
Material (wire isolation)	PVC
Material property (wire isolation)	CFC-, cadmium-, silicone- and lead-free
Shore hardness (wire isolation)	45 ±5 D
Wire-Ø incl. isolation	1.25 mm ±5%
Color/numbering of wires	br, bk, bl
Stranding combination	3 wires twisted
Shield	no
Material (jacket)	PVC
Material property (jacket)	CFC-, cadmium-, silicone- and lead-free
Shore hardness (jacket)	85 ±5 A
Outer-Ø (jacket)	4.5 mm ±5%
Color (jacket)	gray
chemical resistance	good resistance to oil, gasoline and chemicals
thermal resistance	flame retardant UL 1581 VW1 / CSA FT1
Nominal voltage	UL 300 V AC
Test voltage	2000 V AC
Current load capacity	to DIN VDE 0298-4
Temperature range (fixed)	-30...+80 °C
Temperature range (mobile)	-5...+80 °C
Bend radius (fixed)	5× outer Ø
Bend radius (moving)	10× outer Ø
No./diameter of wires	3× 0.25 mm²
Wire isolation	PVC (br, bl, bk)

The information in this brochure has been compiled with the utmost care.
Liability for the correctness completeness and topicality of the information is restricted to gross negligence. Version: 11/20

Jacket Color	gray
Material (jacket)	PVC (UL/CSA)
Outer Ø	4.5 mm ±5%
Bend radius (moving)	10× outer Ø
Temperature range (fixed)	-30...+80 °C
Temperature range (mobile)	-5...+80 °C

Technical Data

Operating voltage	max. 60 V AC/DC
Rated surge voltage	1.5 kV
Operating current per contact	max. 4 A
No. of poles	3
Material group	IEC 60664-1, category I
Locking of ports	Screw thread (M8×1 mm) recommended torque 0.4 Nm, self-securing
Compression gland	M8 (SW9)
Protection	IP65, IP66K, IP67, IP68 inserted and tightened (EN 60529)
Material	PUR
Locking material	Stainless steel 1.4404 (V4A)
suitable for corrugated tube (internal Ø)	6.5 mm

Commercial data

country of origin	DE
customs tariff number	85444290
EAN	4048879109154
eClass	27279218
Packaging unit	1

Sketch

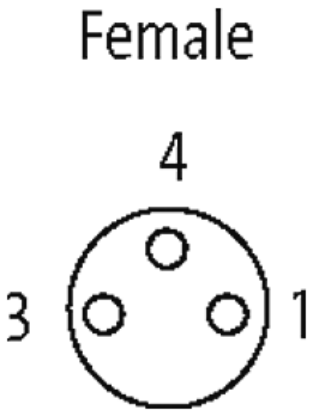

Product may differ from Image

The information in this brochure has been compiled with the utmost care.
Liability for the correctness completeness and topicality of the information is restricted to gross negligence. Version: 11/20