TG SERIES
SUBMINIATURE SLIDE SWITCHES
Overview and specifications

MODEL STRUCTURE

TG			
SERIES	Number of poles	Electrical functions	Terminals

Number of poles

3	Single pole

Electrical functions

6	ON	-	ON
9	ON	OFF	ON

Terminals

P0	Straight PC
Y0	Straight PC, bracket mounting
W0	Right angle, horizontal mounting
MW	Wire-wrap

OPTIONS

Contact and terminal materials	Actuators	Model

Contact and terminal materials

0	Brass, gold plated (std)
1	Brass, silver plated
3	Brass, gold plated (1,27 micron gold)
8	Contact brass, gold plated + tin plated terminals
9	Contact brass, gold plated (1,27 micron gold) + tin plated terminals

Actuators

00	High (standard)
10	Flush

Model

00	Standard
50	Washable

SPECIFICATIONS

- Current/voltage rating with resistive load :
  - Gold plated contacts : 0,4VA 20V max. AC or DC.
  - Silver plated contacts : 0,5A 48V max. AC or DC
- Contact resistance : 20 mΩ max.
- Insulation resistance : 1.000 MΩ min. at 500VDC
- Dielectric strength : 1.000 Vrms 50 Hz min. between terminals and frame
  500 Vrms 50 Hz min. between terminals
- Electrical life at full load :
  2 position switches : 60.000 cycles
  3 position switches : 30.000 cycles
- Travel : 2,60 mm (.102)
- Operating temperature : -30°C to +85°C
- Cleaning : solvents or water + detergent
- Wave soldering : 260°C - 5 sec. max.
- Packaging unit : 100 pieces, except for models with right angle terminals (50 pieces)

MATERIALS

- Case : flame retardant thermoplastic
- Actuator : thermoplastic
- Ground plate and bracket : brass, tin plated
- Contacts and terminals : see above
- Rubber seal : silicone, translucent
- Terminal seal : epoxy

Dimensions : First dimensions are in mm while inches are shown as bracketted numbers.

Packaging unit : 100 pieces

TG SERIES
SUBMINIATURE SLIDE SWITCHES
Standard or washable

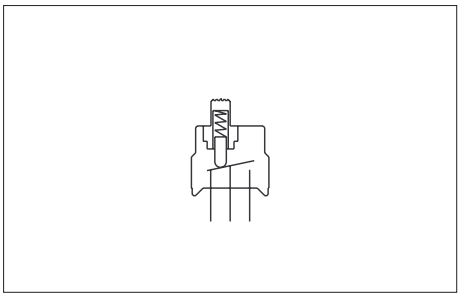

- **Straight PC, right angle or wire-wrap terminals**
- **Single pole**
- **The silicone rubber seal can be removed after cleaning.**

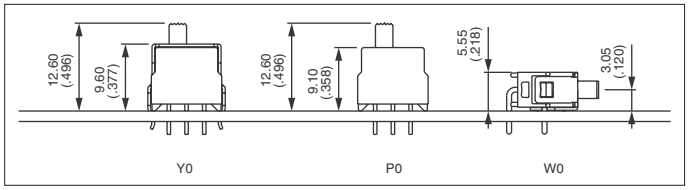

To complete the following part numbers, refer to "Overview" and replace the • symbol with one of the options proposed under "Contact and terminal materials".

Straight PC terminals - standard model



TG36P0•0000	ON	-	ON
TG39P0•0000	ON	OFF	ON

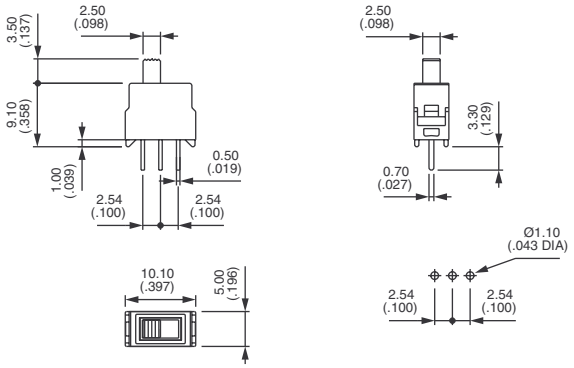

Straight PC terminals - washable model



TG36P0•0050	ON	-	ON
TG39P0•0050	ON	OFF	ON

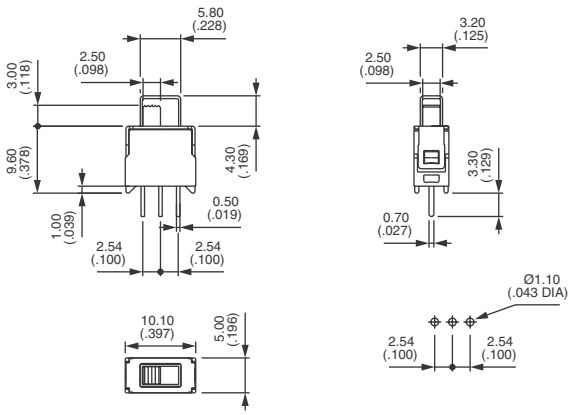

Straight terminals - bracket mounting - standard model



TG36Y0•0000	ON	-	ON
TG39Y0•0000	ON	OFF	ON

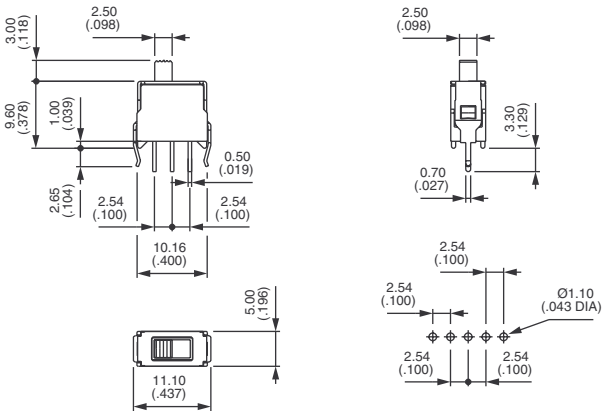

TG SERIES
SUBMINIATURE SLIDE SWITCHES
Standard or washable

Straight terminals - bracket mounting - washable model



TG36Y0•0050	ON	-	ON
TG39Y0•0050	ON	OFF	ON

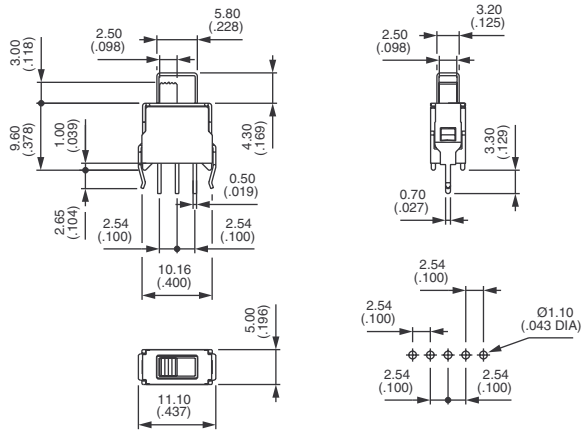

Right angle terminals - horizontal mounting - standard model



TG36W0•0000	ON	-	ON
TG39W0•0000	ON	OFF	ON

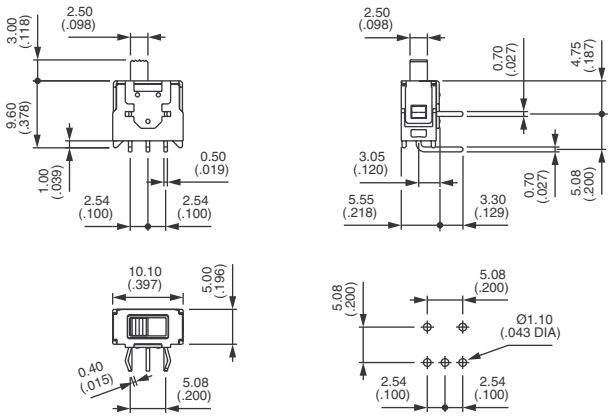

Right angle terminals - horizontal mounting - washable model



TG36W0•0050	ON	-	ON
TG39W0•0050	ON	OFF	ON

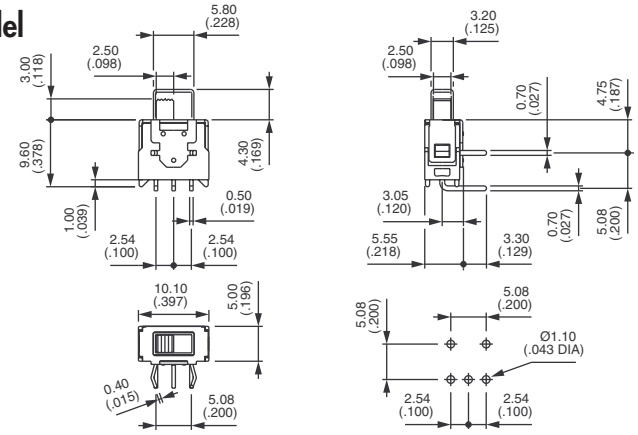

OTHER CONFIGURATIONS

MW Wire-wrap terminals

10 Flush actuator

