Your Expert Partner for **Human Machine Interfaces**

Actuator

Distribution by
Rs-online

61-4210.0



https://rs-online.eao.com/component/61-4210.0...

Your product:



61-4210.0
Actuator

MOUNTING

Mounting type:	Panel mounting

OPERATING-/INDICATION PART

Lever material:	plastic
Lever shape:	short

MECHANICAL CHARACTERISTICS

Switching action:	Rest - Maintained
Switching positions:	2 positions
Switching angle:	90° right
Mechanical lifetime:	According to DIN/IEC 60512-5-6 and EN/IEC 60947-5-1, 100 000 cycles of operation
Operating force:	0.025...0.1 Nm snap-action switching element, 0.4 ... 0.16 Nm slow-make switching element
Operating Travel:	ca. 90°
Tightening torque:	Max. 0.5 Nm
Weight:	0.005 kg

AMBIENT CONDITION

IP Protection:	IP40 rear side, according to EN IEC 60529, IP67 front side, according to EN IEC 60529
Operating temperature:	– 25 °C ... + 55 °C
Storage temperature:	– 40 °C ... + 85 °C

CERTIFICATE

REACH: REACH compliant

RoHS: RoHS compliant

OTHER

Short Description: Actuator, optional illuminative, short, Rest - Maintained

Housing material: Plastic, according to UL 94 V0, self-extinguishing

Product attributes: Illuminative

Switching positions:

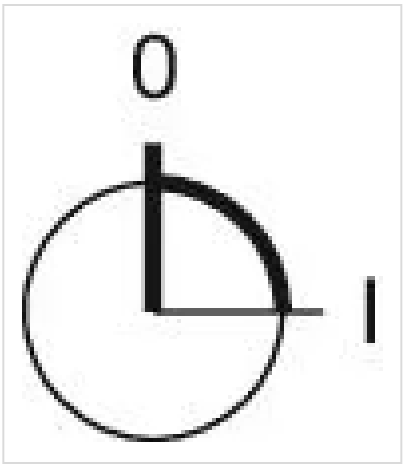

Wiring diagrams:



Mounting cut-outs:

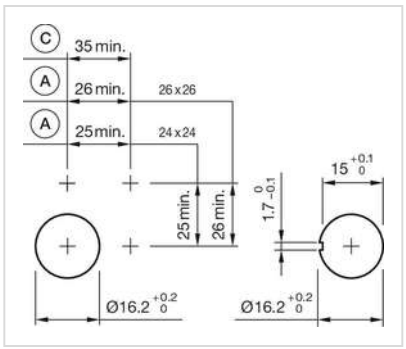

A = Solder/Plug-in terminal 2.8 mm x 0.5 mm
C = Screw terminal

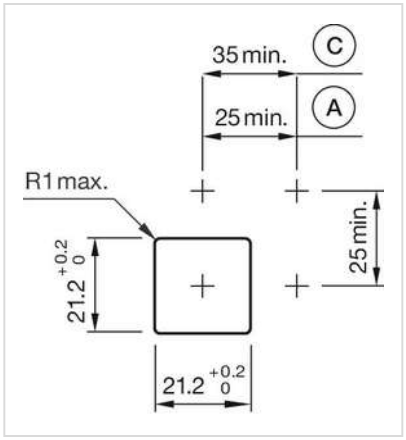

A = Solder/Plug-in terminal 2.8 mm x 0.5 mm
C = Screw terminal

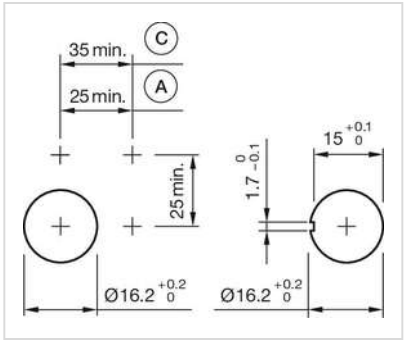

A = Solder/Plug-in terminal 2.8 mm x 0.5 mm
C = Screw terminal

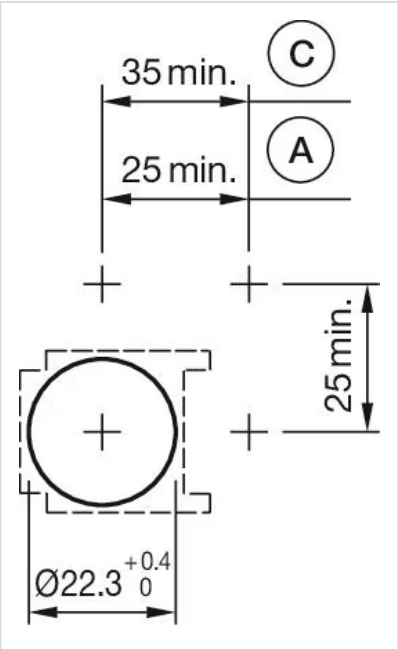

A = Solder/Plug-in terminal 2.8 mm x 0.5 mm
C = Screw terminal

Dimension drawings:

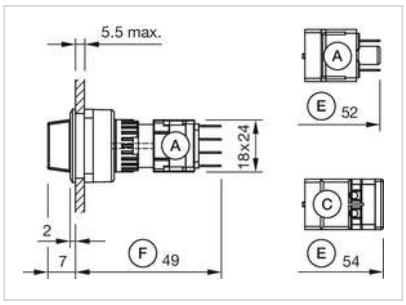

A = Plug-in terminal 2.8 mm x 0.5 mm
C = Screw terminal
E = Slow-make switching element
F = Snap-action switching element

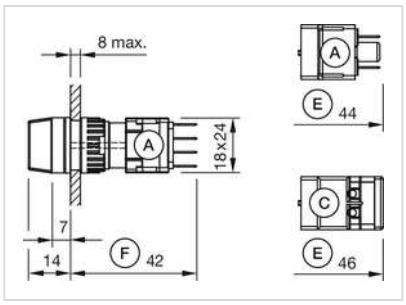

A = Plug-in terminal 2.8 mm x 0.5 mm
C = Screw terminal
E = Slow-make switching element
F = Snap-action switching element

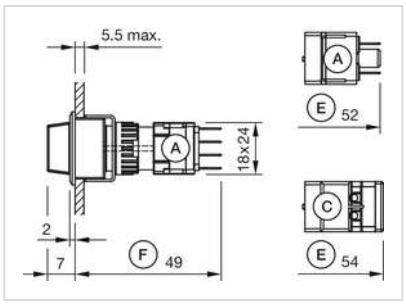

A = Plug-in terminal 2.8 mm x 0.5 mm
C = Screw terminal
E = Slow-make switching element
F = Snap-action switching element

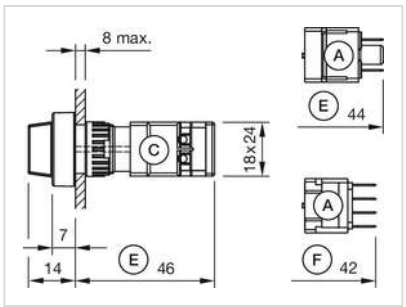

A = Plug-in terminal 2.8 mm x 0.5 mm
C = Screw terminal
E = Slow-make switching element
F = Snap-action switching element