VLA107A240

Variable speed drive, VLA1 type, single-phase, supply 200...240VAC (50/60Hz). Built-in EMC suppressor, Cat. C2, 0.75kW



Product designation		Variable speed drives
Product type designation		VLA1
General characteristics		
Rated power supply voltage		200...240VAC 50/60Hz
Rated output voltage	VAC	Three-phase 0...240VAC 0-599Hz
Rated output current	A	4.2
Rated output power	kW	0.75
Rated output power	HP	1
EMC filter		Built-in EMC suppressor cat. C2
Communication port		None
Technical features		
Input type		Single-phase
Rated mains voltage	VAC	200...240
Operating mains voltage range	VAC	170…264
Rated mains frequency	Hz	50/60
Operating mains frequency range	Hz	45…65
Rated mains current without mains choke		10
Rated mains current with mains choke		8.8
Output type		Three-phase
Output voltage range	VAC	0...240
Output frequency range	Hz	0...599
Current overload	%/s	150% for 60s, 200% for 3s
Power loss		33W
Brake chopper		No
Switching frequency		2…16kHz
Max motor cable length		
Shielded		
Without EMC category	m	50
Category C2	m	20
Functions		
Motor control modes		V/f linear, quadratic torque, sensorless vector control, ECO mode

The characteristics described in this document are subject to updates or modifications at any time. The descriptions, technical and functional information, illustrations and instructions in this brochure are purely illustrative, and are consequently not contractually binding

Speed reference signals		External potentiometer 0…10kΩ Voltage signals: 0… 10VDC Current signals: 0/4… 20mA Buttons on front keyboard Door-mount installation kit 15 preset speeds via digital inputs Motor potentiometer
3-wire control		Yes
S-shape curves		Yes
Slip compensation		Yes
Flying restart		Yes
Access to DC bus		No
DC braking		Yes
DC injection at start		Yes
PID control		Yes, with sleep and rinse function
Sequencer (programmable frequency/time cycles)		Yes
Preset speeds		Yes
Motorpotentiometer		Yes
Different parameter configuration sets		Yes
Parameters changeover function		Yes
Favorite parameters menu		Yes
Autotuning		No
Safe torque Off (STO) safety function		No
PTC probe input		No
Protections		Overcurrent Output short circuit and earth/ground leakage Overvoltage Undervoltage Phase loss Motor heat overload (i2t) Overspeed Speed reverse
Special funct.		Multi-pump PID control (1 main pump frequency regulated + 2 auxiliary pumps activated in direct mode in case of necessity)
Input and Output		
Number of digital input	Nr.	5
Digital input type		Selectable PNP or NPN logic
Number of digital output	Nr.	2

The characteristics described in this document are subject to updates or modifications at any time. The descriptions, technical and functional information, illustrations and instructions in this brochure are purely illustrative, and are consequently not contractually binding

Digital output arrangement				1 relay output with changeover contact (C/O-SPDT) + 1 digital output
Output contacts ratings				Relay output: 3A 250VAC Digital output: 100mA max 30VDC
Number of analog input			Nr.	2
Analog input type				Analog input 1: configurable 0/2…10VDC, 0…5VDC, 0/4…20mA Analog input 2: configurable 0/2…10VDC or 0…5VDC
Number of analog output			Nr.	1
Analog output type				configurable as 0...10VDC, 0…5VDC, 2…10VDC, 0/4…20mA
Ambient conditions				
Temperature				
	Operating temperature			
		min	°C	-10
		max	°C	+55
		Current derating		2.5%/°C over 40°C
	Storage temperature			
		min	°C	-25
		max	°C	+60
Relative humidity			%	5...95% (with no condensing)
Max altitude			m	4000m (over 1000m derate the rated current by 5%/1000m)
Maximum Pollution degree				2
Overvoltage category				III up to 2000m altitude (II above 2000m)
Housing				
Installation position				Vertical
IP degree of protection				IP20
Dimensions (W x H x D)			mm	60 x 208 x 130
Weight			Kg	0.95
Dimensions				

The characteristics described in this document are subject to updates or modifications at any time. The descriptions, technical and functional information, illustrations and instructions in this brochure are purely illustrative, and are consequently not contractually binding

VLA107A240

Variable speed drive, VLA1 type, single-phase, supply 200...240VAC (50/60Hz). Built-in EMC suppressor, Cat. C2, 0.75kW

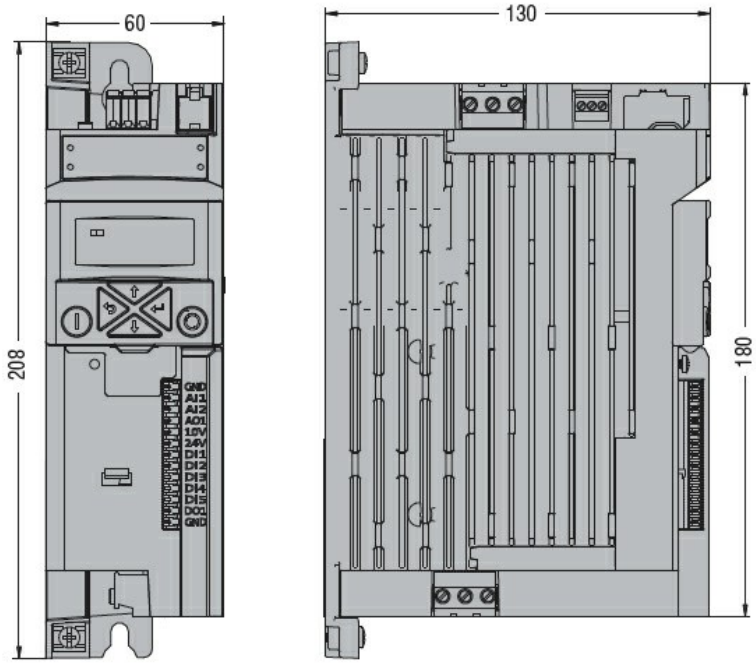

Wiring diagrams

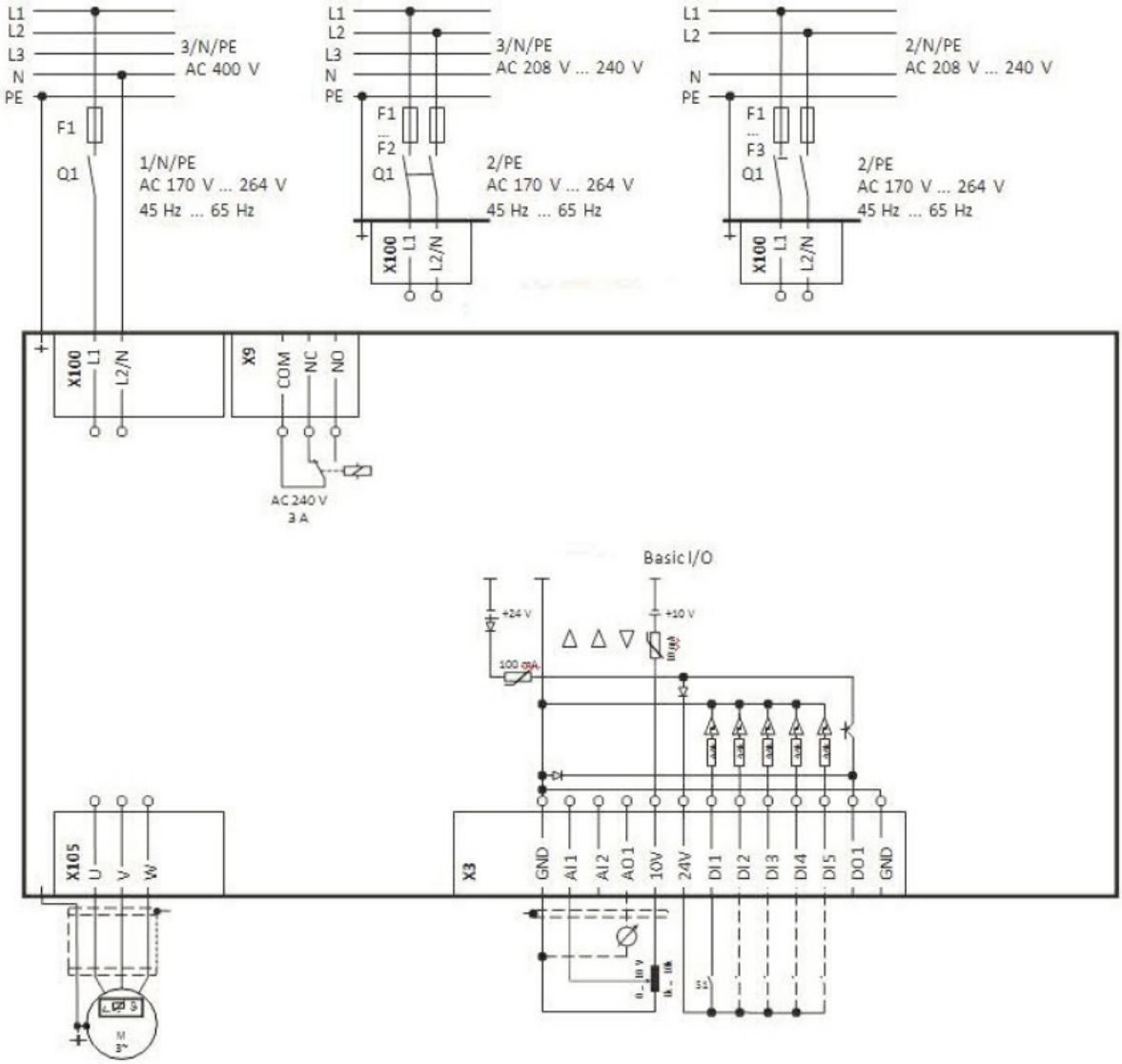

Certifications and compliance

The characteristics described in this document are subject to updates or modifications at any time. The descriptions, technical and functional information, illustrations and instructions in this brochure are purely illustrative, and are consequently not contractually binding

Compliance

CSA 22.2 No. 274
EN 61800-5-1
UL61800-5-1

Certificates

cULus
EAC
RCM

ETIM classification

ETIM 8.0	EC001857 - Frequency converter =< 1 kV

The characteristics described in this document are subject to updates or modifications at any time. The descriptions, technical and functional information, illustrations and instructions in this brochure are purely illustrative, and are consequently not contractually binding