

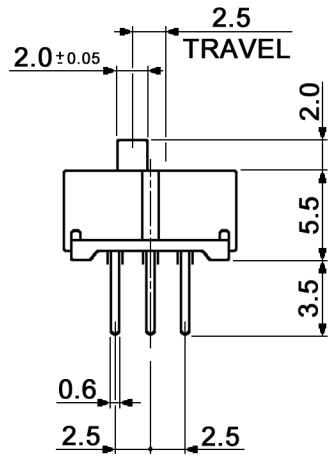

SCHEMATIC

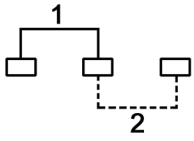

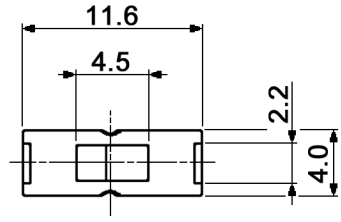

Specifications:

Contact rating:	0.3A, 125V AC (50-60Hz); 0.35A, 30V DC
Contact resistance:	20mOhm max.
Insulation resistance:	100MOhm min. at 500V DC
Dielectric strength:	500V AC for 1 minute
Mechanical life:	10 000 cycles
Contact timing:	non-shorting
Soldering conditions:	see process limitation below
Operating force:	150 +/-100gf
Material:	Case: polyacetal
	Slider: PC
	Stator: PBT G - 30%
	Terminal: copper alloy, silver plated
	Contact: phosphor bronze, silver plated
Process limitation:	JEDEC J-STD-075 class W4Y
	pre-heat max. 100°C / max. 60sec.
	time in wave 5sec. max.
	terminal peak temperature 260°C
	1 pass
	no liquid cleaning

Compliance: RohS II (2011/65/EU)

Tolerances: ±0.2mm			Date	Name	MFP 161 D	
			02/06	dr		
DC-rating	05/14	dr	knitter-switch		30 07 88	Page
Process limitation	05/09	dr				1/1
Modifications	Date	Name				