Rear eye



AVENTICS™ Rear eye

EMERSON.

Rear eye MP4-HD, Series CM1

- Suitable for robust mechanical engineering applications■for clevis mounting MP2 and AB3
- Cylinder mounting in accordance with ISO 21287 ISO 15552
- Suitable piston Ø 16 20 25 32 40 50 63 80 100 125 160 200 250 320 mm



Standards See table below

Technical data

Part No.	Piston Ø	Swivel bearing Ø	Standardization	Housing material	Surface
1825805368	16 mm	6 mm	-	Die-cast aluminum	-
1827002300	20 mm	8 mm	ISO 21287	Steel	galvanized
1827002301	25 mm	8 mm	ISO 21287	Steel	galvanized
1827001283	32 mm	10 mm	ISO 15552	Aluminum (forged)	-
1827001284	40 mm	12 mm	ISO 15552	Aluminum (forged)	-
1827001285	50 mm	12 mm	ISO 15552	Aluminum (forged)	-
1827020086	63 mm	16 mm	ISO 15552	Aluminum (forged)	-
1827001287	80 mm	16 mm	ISO 15552	Aluminum (forged)	-
1827001288	100 mm	20 mm	ISO 15552	Aluminum (forged)	-
1827004866	125 mm	25 mm	ISO 15552	Aluminum (forged)	-
1827004867	160 mm	30 mm	ISO 15552	Nodular graphite iron	galvanized
1827004868	200 mm	30 mm	ISO 15552	Nodular graphite iron	galvanized
1827004869	250 mm	40 mm	ISO 15552	Nodular graphite iron	galvanized
5239813412	320 mm	45 mm	ISO 15552	Nodular graphite iron	galvanized

Scope of delivery: clevis incl. mounting screws

Technical information

Material	
Material	Die-cast aluminum Steel Aluminum (forged) Nodular graphite iron
	galvanized
Screws	Steel
	galvanized

Dimensions

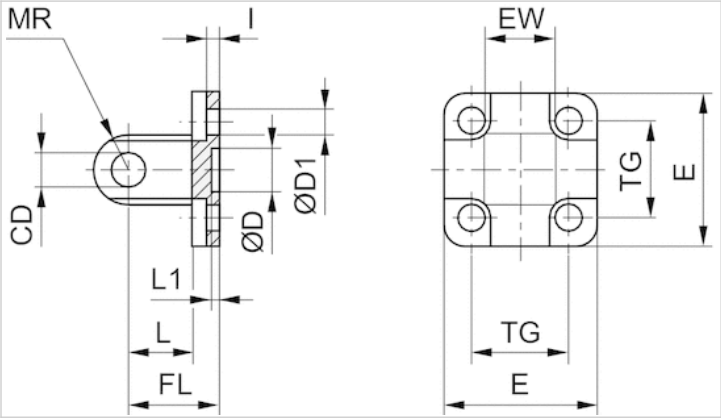

Dimensions

Part No.	Piston Ø	CD H9	Ø D	Ø D1	E	EW	FL ±0,2	I ±0,5	L min.	L1 min.
1825805368	16 mm	6	10 H13	4.5	27	12 –0,2/–0,6	16	2.6	10	3
1827002300	20 mm	8	12 H13	5.5	34	16 –0,2/–0,6	20	2.6	14	3
1827002301	25 mm	8	12 H13	5.5	40	16 –0,2/–0,6	20	2.6	14	3
1827001283	32 mm	10	30 H11	6.6	48	26 –0,2/–0,6	22	5.5	12	4.5
1827001284	40 mm	12	35 H11	6.6	53	28 –0,2/–0,6	25	5.5	15	4.5
1827001285	50 mm	12	40 H11	9	63	32 –0,2/–0,6	27	6.5	15	4.5
1827020086	63 mm	16	45 H11	9	73	40 –0,2/–0,6	32	6.5	20	4.5
1827001287	80 mm	16	45 H11	11	98	50 –0,2/–0,6	36	10	20	4.5
1827001288	100 mm	20	55 H11	11	115	60 –0,2/–0,6	41	10	25	4.5
1827004866	125 mm	25	60 H11	14	140	70 –0,5/–1,2	50	10	30	7
1827004867	160 mm	30	65 H11	18	180	90 –0,5/–1,2	55	10	35	7
1827004868	200 mm	30	75 H11	18	220	90 –0,5/–1,2	60	11	35	7
1827004869	250 mm	40	90 H11	22	280	110 –0,5/–1,2	70	11	45	11
5239813412	320 mm	45	110 H11	26	350	120 –0,5/–1,2	80	15	50	11

MR max.	TG
6	18 ±0,2
8	22 ±0,4
8	26 ±0,4
10	32,5 ±0,2
12	38 ±0,2
12	46,5 ±0,2
16	56,5 ±0,2
16	72 ±0,2
20	89 ±0,2
26	110 ±0,3
31	140 ±0,3
31	175 ±0,3
41	220 ±0,3
45	270 ±0,3

Rear eye MP4-BV, Series CM1

- for clevis mounting MP2 and AB3
- Cylinder mounting in accordance with ISO 15552
- Suitable piston Ø 32 40 50 63 80 100 mm



Standards	ISO 15552

Technical data

Part No.	Piston Ø	Swivel bearing Ø
R412027408	32 mm	10 mm
R412027409	40 mm	12 mm
R412027410	50 mm	12 mm
R412027411	63 mm	16 mm
R412027412	80 mm	16 mm
R412027413	100 mm	20 mm

Scope of delivery: clevis incl. mounting screws

Technical information

Material	
Material	Die-cast aluminum
Screws	Steel
	galvanized

Dimensions

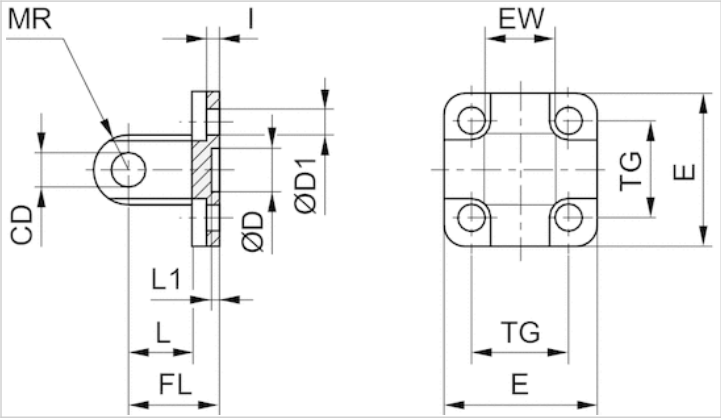

Dimensions

Part No.	Piston Ø	CD H9	Ø D	Ø D1	E	EW	FL ±0,2	I ±0,5	L min.	L1 min.	MR max.
R412027408	32 mm	10	30 H11	6.6	45	26	22	5.5	13	5	10
R412027409	40 mm	12	35 H11	6.6	52	28	25	5.5	16	5	12
R412027410	50 mm	12	40 H11	9	65	32	27	6.5	16	4.5	12
R412027411	63 mm	16	45 H11	9	75	40	32	6.5	21	4.5	16
R412027412	80 mm	16	45 H11	11	95	50	36	10	22	4.5	16
R412027413	100 mm	20	55 H11	11	115	60	41	10	27	4.5	20

TG
32,5
38
46,5
56,5
72
89

Rear eye MP6, Series CM1

- With ball joint and foot
- Cylinder mounting in accordance with ISO 21287 ISO 15552 ISO 6431
- Suitable piston Ø 25 32 40 50 52.5 63 75 80 85, 95 100 115 125 160 200 250 320 mm



Standards	See table below
Weight	See table below

Technical data

Part No.	Piston Ø	Swivel bearing Ø	Standardization	Housing material
3663602000	25 mm	10 mm	ISO 21287	Aluminum (anodized)
1827001619	32 mm	10 mm	ISO 15552	Aluminum (forged)
2798060320	32 mm	10 mm	ISO 15552	Aluminum (forged and anodized)
3663603000	32 mm	10 mm	ISO 6431	Aluminum
1827001620	40 mm	12 mm	ISO 15552	Aluminum (forged)
2798060400	40 mm	12 mm	ISO 15552	Aluminum (forged and anodized)
3663604000	40 mm	12 mm	ISO 6431	Aluminum
1827001621	50 mm	16 mm	ISO 15552	Aluminum (forged)
R412025637	50 mm	16 mm	ISO 15552	Aluminum (forged and anodized)
2798060500	50 mm	12 mm	-	Aluminum (anodized)
3663605000	50 mm	12 mm	ISO 6431	Aluminum
5220163442	52.5 mm	10 mm	-	Aluminum
1827020087	63 mm	16 mm	ISO 15552	Aluminum (forged)
2798060630	63 mm	16 mm	ISO 15552	Aluminum (forged and anodized)
3663606000	63 mm	16 mm	ISO 6431	Aluminum
5220363442	75 mm	12 mm	-	Aluminum
1827001623	80 mm	20 mm	ISO 15552	Aluminum (forged)
R412025638	80 mm	20 mm	ISO 15552	Aluminum (forged and anodized)
2798060800	80 mm	16 mm	-	Aluminum (anodized)
3663608000	80 mm	16 mm	ISO 6431	Aluminum
5220463442	85, 95 mm	16 mm	-	Aluminum
1827001624	100 mm	20 mm	ISO 15552	Aluminum (forged)
2798061000	100 mm	20 mm	ISO 15552	Aluminum (forged and anodized)
3663610000	100 mm	20 mm	ISO 6431	Aluminum
5220563442	115 mm	16 mm	-	Aluminum
1827001625	125 mm	30 mm	ISO 15552	Aluminum (forged)
R412025572	125 mm	30 mm	ISO 15552	Aluminum (forged and anodized)

Part No.	Piston Ø	Swivel bearing Ø	Standardization	Housing material
1827001626	160 mm	35 mm	ISO 15552	Nodular graphite iron (galvanized)
1827001627	200 mm	35 mm	ISO 15552	Nodular graphite iron (galvanized)
1827001628	250 mm	40 mm	ISO 15552	Nodular graphite iron (galvanized)
5239013452	320 mm	50 mm	ISO 15552	Nodular graphite iron (galvanized)

Part No.	Screws material	Bearing material, inner ring	Bearing material, outer ring
3663602000	Stainless steel	Stainless steel	Stainless steel with PTFE coating
1827001619	galvanized steel	Stainless steel	Brass with PTFE coating
2798060320	Stainless steel	Stainless steel	Stainless steel with PTFE coating
3663603000	galvanized steel	Stainless steel	Brass with PTFE coating
1827001620	galvanized steel	Stainless steel	Brass with PTFE coating
2798060400	Stainless steel	Stainless steel	Stainless steel with PTFE coating
3663604000	galvanized steel	Stainless steel	Brass with PTFE coating
1827001621	galvanized steel	Stainless steel	Brass with PTFE coating
R412025637	Stainless steel	Stainless steel	Stainless steel with PTFE coating
2798060500	Stainless steel	Stainless steel	Stainless steel with PTFE coating
3663605000	galvanized steel	Stainless steel	Brass with PTFE coating
5220163442	galvanized steel	Stainless steel	Brass with PTFE coating
1827020087	galvanized steel	Stainless steel	Brass with PTFE coating
2798060630	Stainless steel	Stainless steel	Stainless steel with PTFE coating
3663606000	galvanized steel	Stainless steel	Brass with PTFE coating
5220363442	galvanized steel	Stainless steel	Brass with PTFE coating
1827001623	galvanized steel	Stainless steel	Brass with PTFE coating
R412025638	Stainless steel	Stainless steel	Stainless steel with PTFE coating
2798060800	Stainless steel	Stainless steel	Stainless steel with PTFE coating
3663608000	galvanized steel	Stainless steel	Brass with PTFE coating
5220463442	galvanized steel	Stainless steel	Brass with PTFE coating
1827001624	galvanized steel	Stainless steel	Brass with PTFE coating
2798061000	Stainless steel	Stainless steel	Stainless steel with PTFE coating
3663610000	galvanized steel	Stainless steel	Brass with PTFE coating
5220563442	galvanized steel	Stainless steel	Brass with PTFE coating
1827001625	galvanized steel	Stainless steel	Brass with PTFE coating
R412025572	Stainless steel	Stainless steel	Stainless steel with PTFE coating
1827001626	galvanized steel	Stainless steel	Brass with PTFE coating
1827001627	galvanized steel	Stainless steel	Brass with PTFE coating
1827001628	galvanized steel	Stainless steel	Brass with PTFE coating
5239013452	galvanized steel	Stainless steel	Brass with PTFE coating

Part No.	Bearing material	Weight
3663602000	Stainless steel	0.1 kg
1827001619	Stainless steel	0.1 kg
2798060320	Stainless steel	0.1 kg
3663603000	Stainless steel	0.1 kg
1827001620	Stainless steel	0.1 kg
2798060400	Stainless steel	0.1 kg
3663604000	Stainless steel	0.1 kg
1827001621	Stainless steel	0.2 kg

Part No.	Bearing material	Weight
R412025637	Stainless steel	0.2 kg
2798060500	Stainless steel	0.2 kg
3663605000	Stainless steel	0.2 kg
5220163442	-	0.2 kg
1827020087	Stainless steel	0.3 kg
2798060630	Stainless steel	0.4 kg
3663606000	Stainless steel	0.3 kg
5220363442	-	0.4 kg
1827001623	Stainless steel	0.6 kg
R412025638	Stainless steel	0.5 kg
2798060800	Stainless steel	0.5 kg
3663608000	Stainless steel	0.5 kg
5220463442	-	0.6 kg
1827001624	Stainless steel	0.8 kg
2798061000	Stainless steel	0.9 kg
3663610000	Stainless steel	0.8 kg
5220563442	-	1.1 kg
1827001625	Stainless steel	1.4 kg
R412025572	Stainless steel	1.46 kg
1827001626	-	5.6 kg
1827001627	-	8.5 kg
1827001628	-	14.5 kg
5239013452	-	24.6 kg

Scope of delivery: clevis incl. mounting screws

Technical information

Material	
Material	Aluminum (anodized) Aluminum (forged) Aluminum (forged and anodized) Aluminum Nodular graphite iron (galvanized)
Screws	Stainless steel galvanized steel
Bearing	Stainless steel

Dimensions

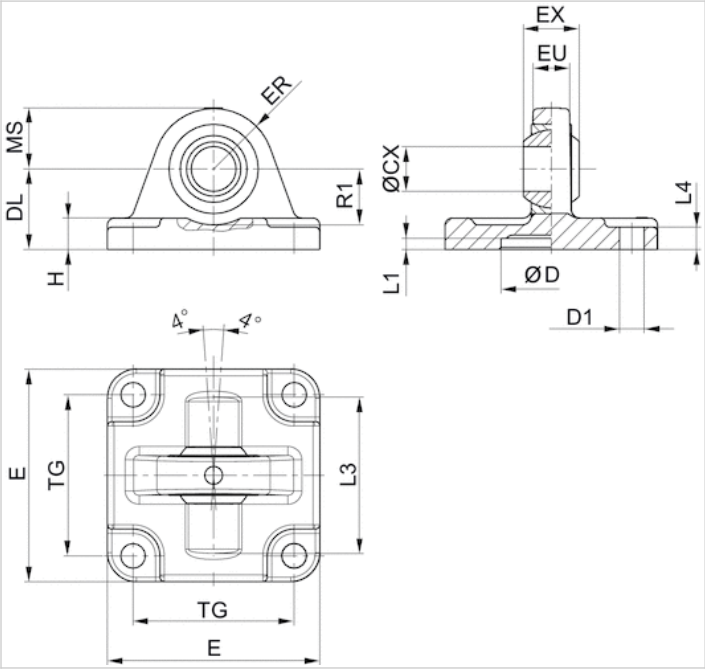

Dimensions

Part No.	Piston Ø	ØCX H7	ØD H11	ØD1 H13	DL ±0,2	E	EX –0,1	ER	EU	H	L1 min.
3663602000	25 mm	10	18	5,5	20	40	9	14	8	6	3
1827001619	32 mm	10	30	6.6	22	47	14	15	10.5	9	4.5
2798060320	32 mm	10	30	6,6	22	46	14	17	12,5	6.5	4.5
3663603000	32 mm	10	20	5.5	22	46	9	15	8	6	0.5
1827001620	40 mm	12	35	6.6	25	53	16	18	12	9	4.5
2798060400	40 mm	12	35	6,6	25	52	16	20	12	8	4.5
3663604000	40 mm	12	30	6.6	28	55	12	17	9.5	8	0.5
1827001621	50 mm	16	40	9	27	65	21	20	15	10.5	4.5
R412025637	50 mm	16	40	9	27	64	21	22	14	9	4.5
2798060500	50 mm	12	40	9	25	62	16	22	14	9	5
3663605000	50 mm	12	40	6,6	28	62	12	17	9.5	9	0,5
5220163442	52.5 mm	10	–	7.5	29	45	14	15	10.5	8	–
1827020087	63 mm	16	45	9	32	75	21	23	15	10.5	4.5
2798060630	63 mm	16	45	9	32	74	21	25	15	11	4,5
3663606000	63 mm	16	55	9	36	80	16	25	12,5	11	0,5
5220363442	75 mm	12	–	10	26	65	16	18	12	10	–
1827001623	80 mm	20	45	11	36	95	25	27	18	14	4.5
R412025638	80 mm	20	45	11	36	94	25	30	17	12	4.5
2798060800	80 mm	16	45	11	36	94	21	30	17	12	4,5
3663608000	80 mm	16	70	9	38	94	16	28	12,5	12	0,5
5220463442	85, 95 mm	16	–	10	30	75	21	22	15	10	–
1827001624	100 mm	20	55	11	41	115	25	30	18	15	4.5
2798061000	100 mm	20	55	11	41	114	25	32	20	15	4,5
3663610000	100 mm	20	90	11	43	114	20	35	16	15	0,5

Part No.	Piston Ø	ØCX H7	ØD H11	ØD1 H13	DL ±0,2	E	EX –0,1	ER	EU	H	L1 min.
5220563442	115 mm	16	–	12	37.5	95	21	25	15	12	–
1827001625	125 mm	30	60	14	50	140	37	40	25	16	7
R412025572	125 mm	30	60	13,5	50	138	37	-	25	-	7
1827001626	160 mm	35	65	18	55	176	43	44	30	17	7
1827001627	200 mm	35	75	18	60	216	43	47	30	19.5	7
1827001628	250 mm	40	90	22	70	275	49	53	35	22	11
5239013452	320 mm	50	110	26	80	340	60	63	45	27	11

L3	L4	MS -0,5	R1 min.	TG
–	3	14	–	26
36	5.5	15	12	32,5 ±0,2
–	5,5	15,5	16,5	32,5
42	6	15	16	32
42	5.5	18	15	38 ±0,2
–	5,5	18	19,5	38
48	8	17	16	32
48	6.5	21	19	46,5 ±0,2
48	6,5	21	19	46,5
46,5	6,5	24	18,5	46,5
55	9	17	18	46
–	–	–	–	33
55	6.5	23	21	56,5 ±0,2
–	6,5	23	25,5	56,5
70	11	25	21	59
–	–	–	–	49
70	10	27	24	72 ±0,2
70	10	28	24	72
–	10	30	26	72
80	12	28	21	73
–	–	–	–	59
80	10	30	25	89 ±0,2
–	10	30	31	89
100	15	35	28	90
–	–	–	–	75
100	10	40	33	110 ±0,3
-	10	40	32	110 ±0,3
130	10	44	39	140 ±0,3
130	11	47	41	175 ±0,3
–	11	53	45	220 ±0,3
180	15	63	55	270 ±0,3

Rear eye MP9, Series CM1

- With rubber bushing
- Cylinder mounting in accordance with ISO 21287 ISO 15552
- Suitable piston Ø 25 32 40 50 63 80 100 125 mm



Standards	See table below
Weight	See table below

Technical data

Part No.	Piston Ø	Swivel bearing Ø	Standardization	Housing material	Bearing material
3683202000	25 mm	10 mm	ISO 21287	Die-cast aluminum	Bronze
3683203000	32 mm	10 mm	ISO 15552	Aluminum (forged)	Bronze
3683204000	40 mm	12 mm	ISO 15552	Aluminum (forged)	Bronze
3663205000	50 mm	12 mm	-	Aluminum (forged)	Bronze
3683205000	50 mm	12 mm	ISO 15552	Aluminum (forged)	Bronze
3683206000	63 mm	16 mm	ISO 15552	Aluminum (forged)	Bronze
3663208000	80 mm	16 mm	-	Aluminum (forged)	Bronze
3683208000	80 mm	16 mm	ISO 15552	Aluminum (forged)	Bronze
3683210000	100 mm	20 mm	ISO 15552	Aluminum (forged)	Bronze
R412015973	125 mm	25 mm	ISO 15552	Aluminum (forged)	steel, galvanized

Part No.	Weight	Fig.
3683202000	0.063 kg	Fig. 1
3683203000	0.092 kg	Fig. 2
3683204000	0.143 kg	Fig. 1
3663205000	0.203 kg	Fig. 2
3683205000	0.217 kg	Fig. 2
3683206000	0.411 kg	Fig. 1
3663208000	0.619 kg	Fig. 2
3683208000	0.64 kg	Fig. 2
3683210000	0.956 kg	Fig. 1
R412015973	1.37 kg	Fig. 2

Scope of delivery: clevis incl. mounting screws

Technical information

Material	
Material	Die-cast aluminum Aluminum (forged)
Bearing	Bronze steel, galvanized

Dimensions

Fig. 1

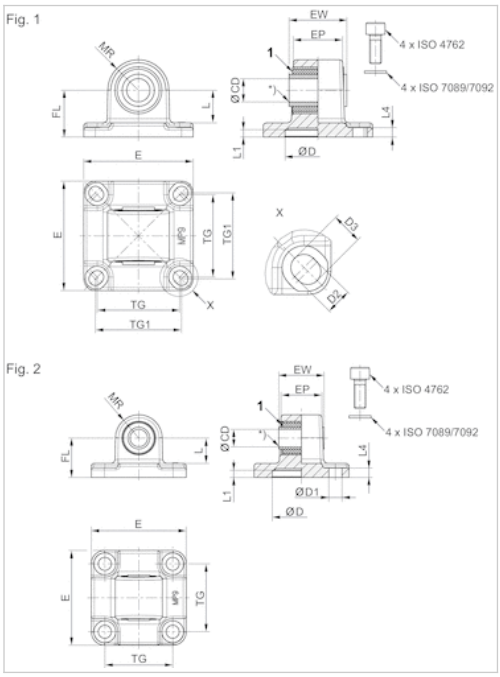

Fig. 2

1) Rubber bushing

Dimensions

Part No.	Piston Ø	CD H11	CD H9	E	EW	EP	TG	TG1 ±0,2	FL ±0,2	L 1)	MR	L1	L4
3683202000	25 mm	10	-	40	17.5	14,5	26	27	20	14.8	12,5	3	3
3683203000	32 mm	10	-	46	25.5	18,9	32.5	–	22	13.8	12.5	5	5.5
3683204000	40 mm	-	12	53	27	23,5	38	40	25	16.3	15	5	5.5
3683205000	50 mm	-	12	65	31	28	46.5	–	27	17.3	16	5	6.5
3683206000	63 mm	-	16	75	39.5	33.5	56.5	59	32	22.3	21	5	6.5
3683208000	80 mm	-	16	94.5	49.5	43	72	–	36	21.8	22	5	10
3683210000	100 mm	-	20	114	59.5	54	89	90	41	25.8	25	5	10
R412015973	125 mm	-	25	138	69.5	60	110	–	50	33.8	34	7.5	10

D H11	D1 H13	D2 -0,2	D3 -0,2	Fig.
18	–	5,5	6,2	Fig. 1
30	6.6	–	–	Fig. 2
35	–	6.6	8	Fig. 1
40	9	–	–	Fig. 2
45	6.6	–	–	Fig. 1

D H11	D1 H13	D2 -0,2	D3 -0,2	Fig.
45	11	–	–	Fig. 2
55	–	11	11.7	Fig. 1
60	13.5	–	–	Fig. 2

Efficient pneumatic solutions, our program: cylinders and drives, valves and valve systems, air supply management



Visit us: Emerson.com/Aventics

Your local contact: Emerson.com/contactus

Emerson.com

Facebook.com/EmersonAutomationSolutions

LinkedIn.com/company/Emerson-Automation-Solutions

Twitter.com/EMR_Automation

An example configuration is depicted on the title page. The delivered product may thus vary from that in the illustration. Subject to change. This Document, as well as the data, specifications and other information set forth in it, are the exclusive property of AVENTICS GmbH. It may not be reproduced or given to third parties without its consent. Only use the AVENTICS products shown in industrial applications. Read the product documentation completely and carefully before using the product. Observe the applicable regulations and laws of the respective country. When integrating the product into applications, note the system manufacturerâ€™s specifications for safe use of the product. The data specified only serve todescribe the product. No statements concerning a certain condition or suitability for a certain application can be derived from our information. The information given does not release the user from the obligation of own judgment and verification. It must be remembered that the products are subject to a natural process of wear and aging.

The Emerson logo is a trademark and service mark of Emerson Electric Co. Brand logotype are registered trademarks of one of the Emerson family of companies. All other marks are the property of their respective owners. © 2017 Emerson Electric Co. All rights reserved.
2019-03

EMERSON

CONSIDER IT SOLVED™