# E11930

## COMBICON connector

**COMBICON cage clamp set**

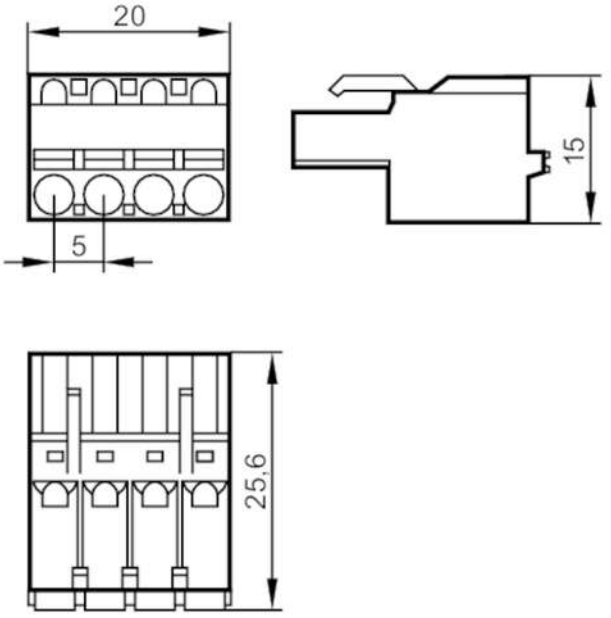


| Electrical data | | |
|---|---|---|
| Voltage rating | [V] | 250 |
| Max. load current | [A] | 12;  (2,5 mm²) |
| **Mechanical data** | | |
| Weight | [g] | 34.2 |
| Materials | | PA; current carrying parts: copper alloy tin-plated |
| **Remarks** | | |
| Remarks | | colour of the terminals: 2 x red, 1 x black, 1 x grey, 1 x green |
| Pack quantity | | 5 pcs. |