NOTES

MATERIAL	NYLON
PARTS	TWO NYLON SCREWS & CLIP
COLORS	BLACK OR GRAY (ADD GY TO END OF PART NUMBER)

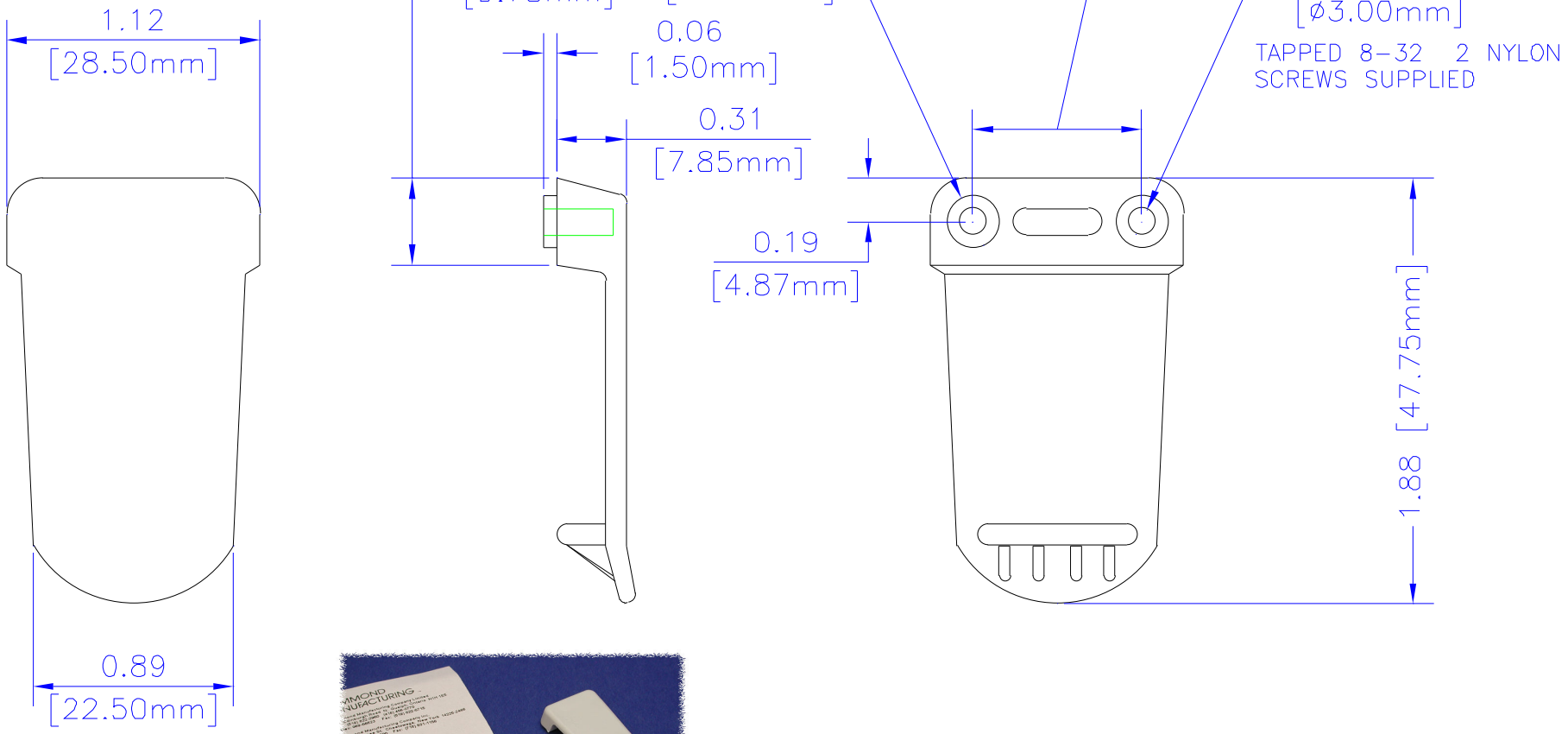

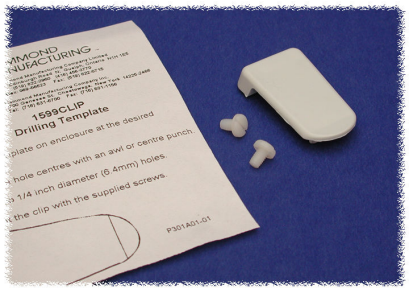

UNLESS OTHERWISE SPECIFIED DIMENSIONS ARE IN INCHES

X	+/- .1
XX	+/- .02
XXX	+/- .015
CUTS	+/- .005
ANGLES	+/- .5 DEG.

NOTICE
HAMMOND CLAIMS PROPRIETARY RIGHTS TO THE MATERIAL ON THIS DRAWING. IT IS INTENDED TO BE USED AS A REFERENCE FOR ENGINEERING INFORMATION ONLY. THIS INFORMATION MAY NOT BE USED TO MANUFACTURE PRODUCT WITHOUT WRITTEN PERMISSION FROM HAMMOND MANUFACTURING.

HAMMOND MANUFACTURING

WEB: WWW.HAMMONDMFG.COM

TITLE: HAMMOND 1599 SERIES BELT CLIP

DRAWN BY	MJM
DATE	02/17/01
SCALE	
PAGE	1 OF 1
PART NUMBER	1599CLIP