sferaco
VALVES & FITTINGS

REF. 641-642

BRASS VALVE FOR WATER METER A.C.S.





Size :	DN 1/2" to 2“
Ends :	Free nut BSP, male or female
Min Temperature :	- 10°C
Max Temperature :	+ 120°C
Max Pressure :	20 Bars up to DN1”1/2, 16 bars over
Specifications :	Before or after water meter PTFE packing With free nut
Materials :	Brass

Sferaco 90 rue du Ruisseau 38297 St Quentin Fallavier Tel: + 33 (0) 474.94.15.90 Fax: + 33 (0) 474.95.62.08 Internet: www.sferaco.fr E-mail : sferaco@sferaco.fr

Information provided as an indication and subject to possible modification

BRASS VALVE FOR WATER METER A.C.S.

SPECIFICATIONS :

- Before or after water meter
- PTFE packing
- Solid ball
- With free nut
- Plumbing hole on the nut
- Brass handle 2/3-1/3 for DN 1/2“ and 3/4“, red aluminium butterfly handle from DN 1“ to 1“1/4 and aluminium handle over
- Fabrication according to NF079 for DN 3/4"-1/2" and 3/4"-3/4"
- Made in Italy
- Hole in the ball (to avoid water stagnation between the ball and the body) for DN 3/4"-1/2" and 3/4"-3/4"
- PTFE packing + EPDM O ring for DN 3/4"
- 10 years fabrication guarantee (this guarantee does not cover installation faults and wearing faults) for DN 3/4" NF
- Possible with locking device for DN1/2“-1/2“, 3/4“-3/4“ and 3/4“-1“ (**Ref. 9810404**)

USE :

- Water distribution
- Min Temperature Ts : - 10°C
- Max Temperature Ts : + 120°C
- Max Pressure Ps : 20 bars up to DN 1“1/2, 16 bars for DN 2“

PRESSURE / TEMPERATURE GRAPH (STEAM EXCLUDED) :

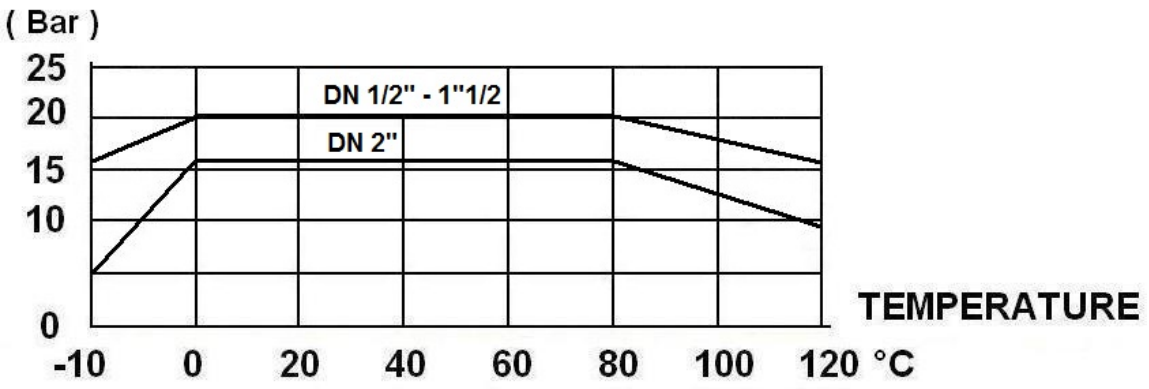

RANGE :



- Valve with free nut / Female BSP **Ref. 641** DN 1/2" to 1“1/2



- Valve with free nut / Male BSP **Ref. 642** DN 1/2" to 2“



- Locking device SFERALOCKING (without valve) **Ref. 9810404** (only for DN1/2“ and 3/4“)
- Passkey for locking device SFERALOCKING **Ref. 9810403**

Information provided as an indication and subject to possible modification

BRASS VALVE FOR WATER METER A.C.S.

MATERIALS FOR FREE NUT / FEMALE TYPE NF REF. 641 **DN 3/4“-1/2“ and 3/4“-3/4“:**

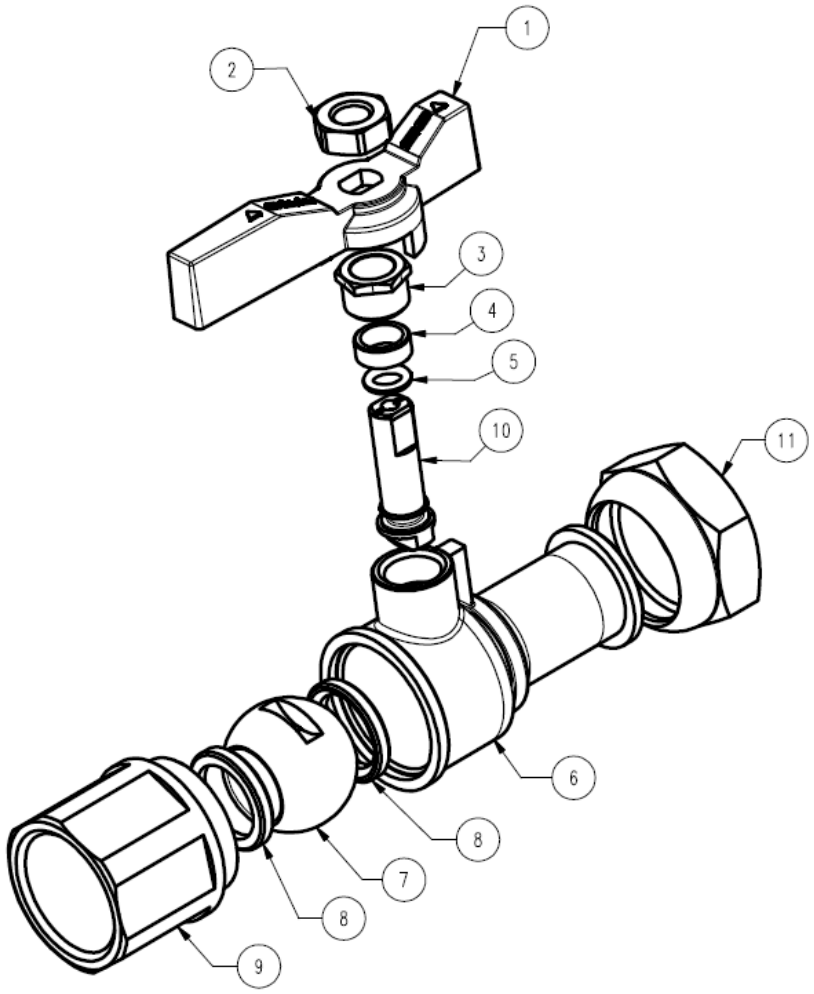

Item	Designation	Materials Ref. 641 3/4“-1/2“ and 3/4“-3/4“ NF
1	Handle	Brass with green epoxy painting RAL 6029
2	Handle nut	Steel Geomet 321 coated
3	Packing nut	Brass CW 614 N according to EN 12164
4	Packing	PTFE
5	O ring	EPDM
6	Body	Brass CW 617 N according to EN 12165
7	Ball	Brass CW 617 N according to EN 12165 chromed
8	Seat	PTFE
9	Bonnet	Brass CW 617 N according to EN 12165
10	Stem	Brass CW 614 N according to EN 12164
11	Free nut	Brass CW 614 N according to EN 12164

BRASS VALVE FOR WATER METER A.C.S.

***MATERIALS FOR FREE NUT / FEMALE TYPE REF. 641* from DN 1“-3/4“ to 1“1/2-1“1/4 :**

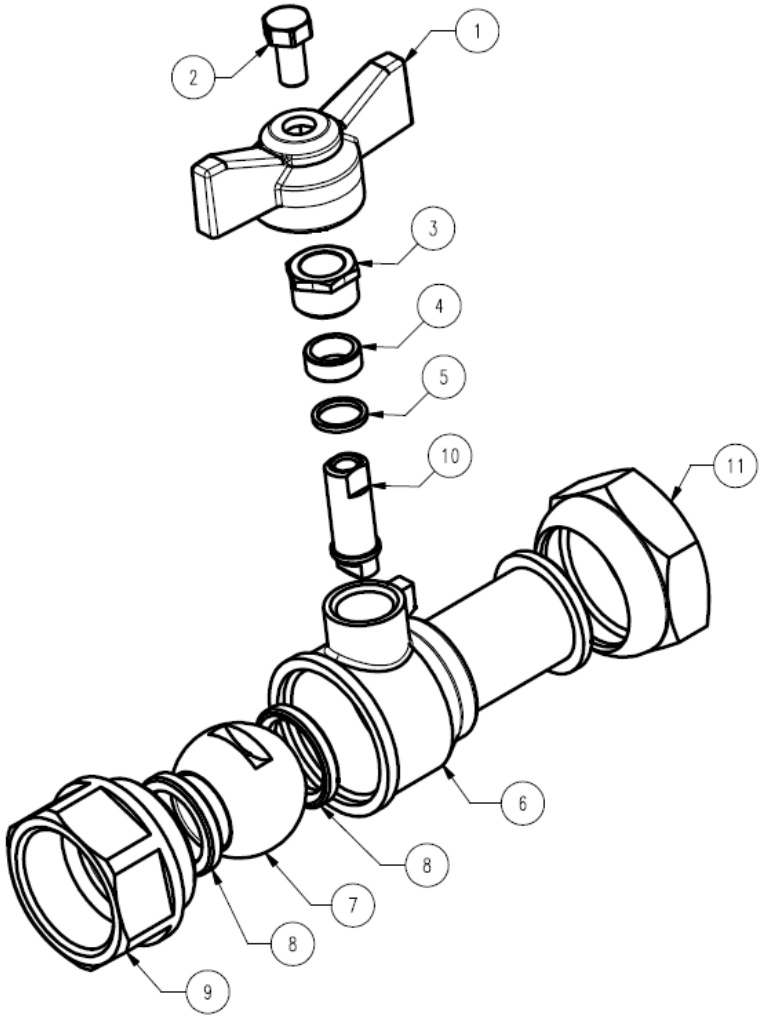

Item	Designation	Materials Ref. 641 DN 1“ to 1“1/2
1	Handle	Aluminium UNI 5076-74 epoxy painting coated red
2	Handle screw	Galvanized steel UNI 5739
3	Packing nut	Brass CW 614 N according to EN 12164
4	Packing	PTFE
5	Ring	Brass CW 614 N according to EN 12164
6	Body	Brass CW 617 N according to EN 12165
7	Ball	Brass CW 617 N according to EN 12165 chromed
8	Seat	PTFE
9	Bonnet	Brass CW 617 N according to EN 12165
10	Stem	Brass CW 614 N according to EN 12164
11	Free nut	Brass CW 614 N according to EN 12164

Information provided as an indication and subject to possible modification

BRASS VALVE FOR WATER METER A.C.S.

MATERIALS FOR FREE NUT / MALE TYPE REF. 642 :

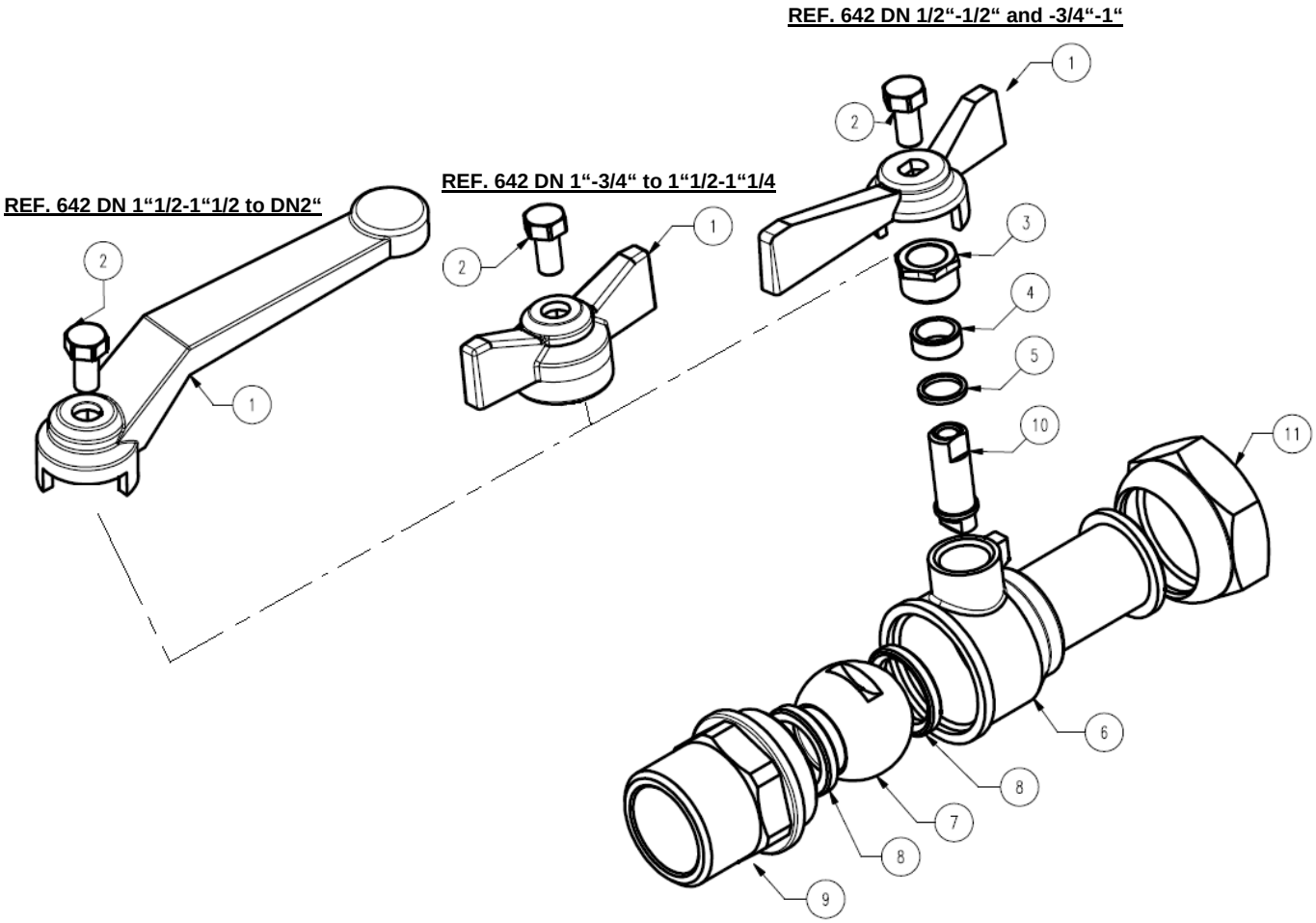

Item	Designation	Materials Ref. 642 DN 1/2"-1/2" and 3/4"-1"	Materials Ref. 642 DN 1"to 2"
1	Handle	Brass	Aluminium UNI 5076-74 epoxy painting coated
2	Vis manette	Brass	Galvanized steel UNI 5739
3	Ecrou presse étoupe	Brass CW 614 N according to EN 12164	Brass CW 614 N according to EN 12164
4	Presse étoupe	PTFE	PTFE
5	Bague	Brass CW 614 N according to EN 12164	Brass CW 614 N according to EN 12164
6	Corps	Brass CW 617 N according to EN 12165	Brass CW 617 N according to EN 12165
7	Sphère	Brass CW 617 N according to EN 12165 chromed	Brass CW 617 N according to EN 12165 chromed
8	Siège	PTFE	PTFE
9	Mamelon	Brass CW 617 N according to EN 12165	Brass CW 617 N according to EN 12165
10	Axe	Brass CW 614 N according to EN 12164	Brass CW 614 N according to EN 12164
11	Ecrou prisonnier	Brass CW 614 N according to EN 12164	Brass CW 614 N according to EN 12164

BRASS VALVE FOR WATER METER A.C.S.

MATERIALS FOR FREE NUT / MALE TYPE NF REF. 642 DN 3/4"-1/2" and 3/4"-3/4" :

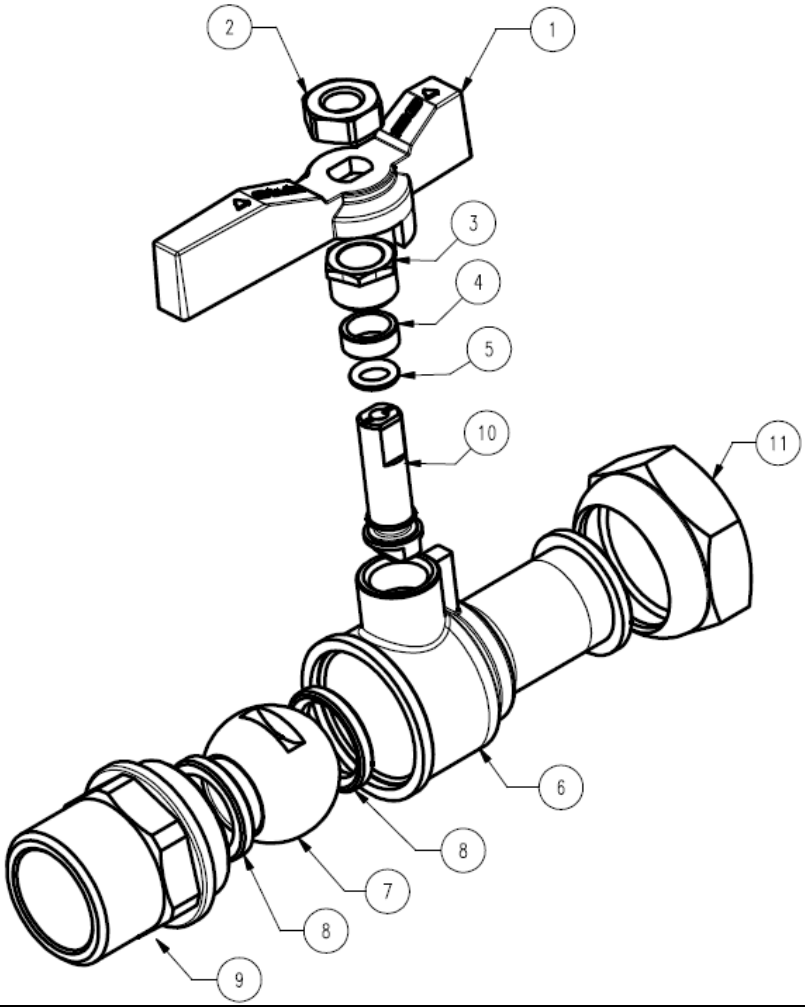

Item	Designation	Materials Ref. 642 DN 3/4“-1/2“ and 3/4“-3/4“ NF
1	Handle	Brass with green epoxy painting RAL 6029
2	Handle nut	Steel Geomet 321 coated
3	Packing nut	Brass CW 614 N according to EN 12164
4	Packing	PTFE
5	O ring	EPDM
6	Body	Brass CW 617 N according to EN 12165
7	Ball	Brass CW 617 N according to EN 12165 chromed
8	Seat	PTFE
9	Bonnet	Brass CW 617 N according to EN 12165
10	Stem	Brass CW 614 N according to EN 12164
11	Free nut	Brass CW 614 N according to EN 12164

Sferaco 90 rue du Ruisseau 38297 St Quentin Fallavier Tel: + 33 (0) 474.94.15.90 Fax: + 33 (0) 474.95.62.08 Internet: www.sferaco.fr E-mail : sferaco@sferaco.fr

Information provided as an indication and subject to possible modification

BRASS VALVE FOR WATER METER A.C.S.

SIZE FOR FREE NUT / FEMALE TYPE NF REF.641 (in mm) **DN 3/4“*:***

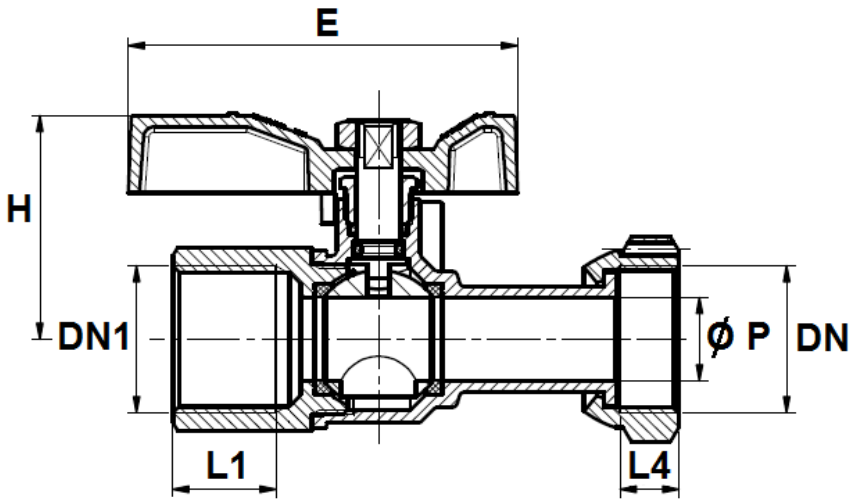

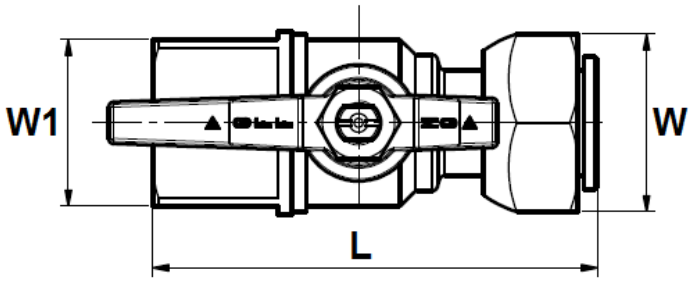

Ref.	DN	3/4"	3/4“
641 NF	DN1	1/2"	3/4“
	Ø P	15	15
	L	80	80
	L4	10	10
	L1	17.5	18.5
	E	70	70
	H	40	40
	W (on flat)	32	32
	W1 (on flat)	24	30
	Weight (in Kg)	0.270	0.280

Information provided as an indication and subject to possible modification

BRASS VALVE FOR WATER METER A.C.S.

SIZE FOR FREE NUT / FEMALE TYPE REF.641 **DN 1“-3/4“ to 1“1/2-1“1/4** ***(in mm) :***

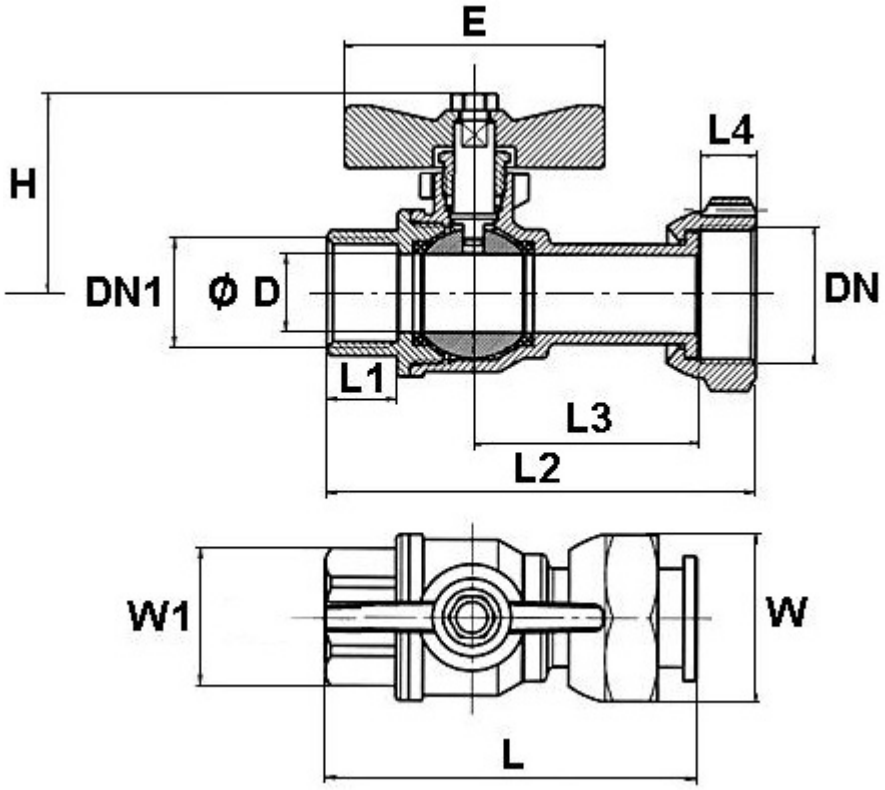

Ref.	DN	1“	1“	1“1/2
641	DN1	3/4“	1“	1“1/4
	Ø D	20	20	32
	L	78	79	102.5
	L4	9	8.5	12
	L3	47.5	48	64
	L2	87	88	115
	L1	12	13	17
	E	60	65	65
	H	49.75	57.5	69
	W (on flat)	37	37	53
	W1 (on flat)	31	37	46
	Weight (in Kg)	0.447	0.467	0.976

BRASS VALVE FOR WATER METER A.C.S.

SIZE FOR FREE NUT / MALE TYPE REF.642 (in mm) :

DN 1“1/2-1“1/2 to 2“ **DN 1“-3/4“ to 1“1/2-1“1/4** **DN 1/2“-1/2“ and 3/4“-1“**

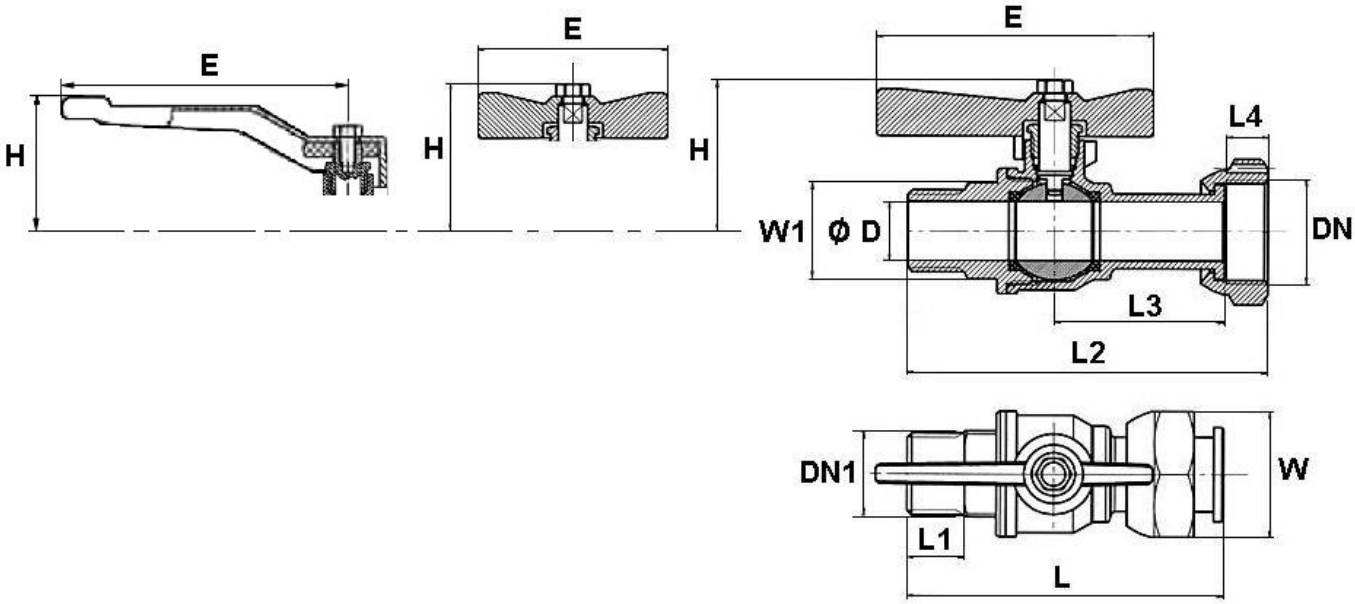

Ref.	DN	1/2"	3/4“	1“	1“	1“1/4	1“1/4	1“1/2	1“1/2	2“
642	DN1	1/2“	1“	3/4“	1“	1“	1“1/4	1“1/4	1“1/2	2“
	Ø D	12	15	20	20	25	25	32	32	40
	L	68	80.5	83.5	90	98	100	113	114.1	132
	L4	8.5	10.5	9	9	10	10	12	12	15
	L3	43	43	47.5	48	54	54	65	64.3	71
	L2	77	91.5	92.5	99	108	111	124	126.1	147.5
	L1	10	14	10	14.5	12	13	15	17	18
	E	70	70	60	65	65	65	65	130	130
	H	36.5	38.5	49.75	57.5	63.5	63.5	67	79	85
	W (on flat)	26	32	37	37	46	46	54	53	64
	W1 (on flat)	-	25	27	34	34	42	42	48	60
	Weight (Kg)	0.195	0.289	0.445	0.495	0.711	0.772	1.011	1.023	1.560

Information provided as an indication and subject to possible modification

BRASS VALVE FOR WATER METER A.C.S.

SIZE FOR FREE NUT / MALE TYPE NF REF.642 (in mm) :

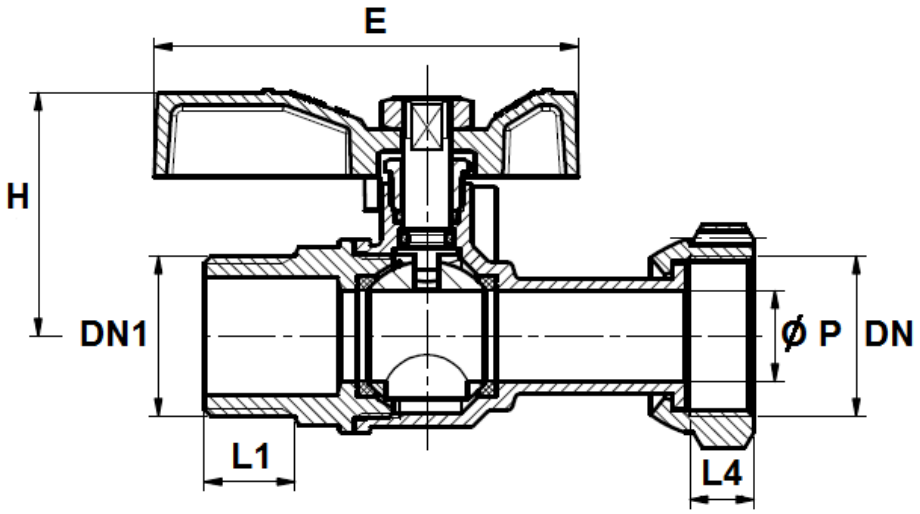

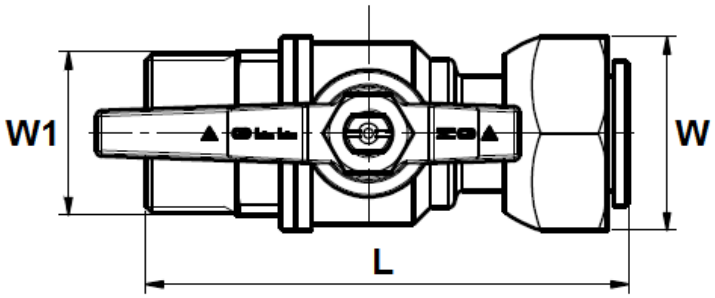

Ref.	DN	3/4“	3/4“
642 NF	DN1	1/2“	3/4“
	Ø P	15	15
	L	80	79.8
	L4	10	10
	L1	14.5	15
	E	70	70
	H	40	40
	W (on flat)	32	32
	W1 (on flat)	22	27
	Weight (in Kg)	0.265	0.275

BRASS VALVE FOR WATER METER A.C.S.

STANDARDS :

- Fabrication according to ISO 9001 : 2008
- Fabrication according to **NF079** (for DN 3/4"-1/2" and 3/4"-3/4")
- DIRECTIVE 97/23/CE : Products excluded from directive (Article 1, § 3.2)
- French water agreement **A.C.S. N° 13 ACC LY 132** for NF valves for DN 3/4"-1/2" and 3/4"-3/4"
- French water agreement **A.C.S. N° 13 ACC LY 133** for the other DN
- Threaded female BSP cylindrical and male BSP cylindrical ends according to ISO 228-1

ADVICE : Our opinion and our advice are not guaranteed and SFERACO shall not be liable for the consequences of damages.
The customer must check the right choice of the products with the real service conditions.

Information provided as an indication and subject to possible modification

BRASS VALVE FOR WATER METER A.C.S.

INSTALLATION INSTRUCTIONS

GENERAL GUIDELINES :

- Ensure that the valves to be used are appropriate for the conditions of the installation (type of fluid,pressure and temperature).
- Be sure to have enough valves to be able to isolate the sections of piping as well as the appropriate equipment for maintenance and repair.
- Ensure that the valves to be installed are of correct strenght to be able to support the capacity of their usage.
- **Installation of all circuits should ensure that their function can be automatically tested on a regular basis (at least two times a year).**

INSTALLATION INSTRUCTIONS :

- **Before installing the valves,clean and remove any objects from the pipes** (in particular bits of sealing and metal) which could obstruct and block the valves.

- **Ensure that both connecting pipes either side of the valve (upstream and downstream) are aligned (if they're not,the valves may not work correctly).**

- **Make sure that the two sections of the pipe (upstream and downstream) match,the valve unit will not absorb any gaps.Any distortions in the pipes may affect the thightness of the connection,the working of the valve and can even cause a rupture.**To be sure,place the kit in position to ensure the assembling will work.

- Before starting the fitting,ensure that the threads and tapping are clean.

- **If sections of piping do not have their final support in place,they should be temporarily fixed.This is to avoid unnecessary strain on the valve.**

- The theoretical lenghts given by ISO/R7 for the tapping are typically longer than required,the lenght of the thread should be limited, and **check that the end of the tube does not press right up to the head of the thread.**

- For the sealing assembly valve piping, it is essential to use products that are compatible with the requirements of the French water agreement ACS : **plumbers hemp proscribed**.

- Position the pipe clips on both sides of the valve.
- If mounting on an air conditioning with PER tubing and hoses,it is necessary to support the tubes and hoses with the fixing to avoid strain on the valve.
- When screwing the valve,ensure that you only rotate on screwed side by the 6 ended side.Use an open ended spanner or an adjustable spanner and not a monkey wrench.
- **Never use a vice to tighten the fixings of the valve.**
- Do not over tighten the valve.Do not block with any extensions as it may cause a rupture or weakening of the casing**.**
- **In general,for all valves used in buildings and heating,do not tighten above a torque of 30 Nm.**

The advice and assembly instructions above do not conform to any guarantee.
The information is given in general.It states what must not and must be done.
It is provided to ensure the safety of the personnel and the reliability of the valves.
The instructions in bold must be followed

Information provided as an indication and subject to possible modification