NM500A

Inductive NAMUR sensor

IMC2020BN/US/2G/1D

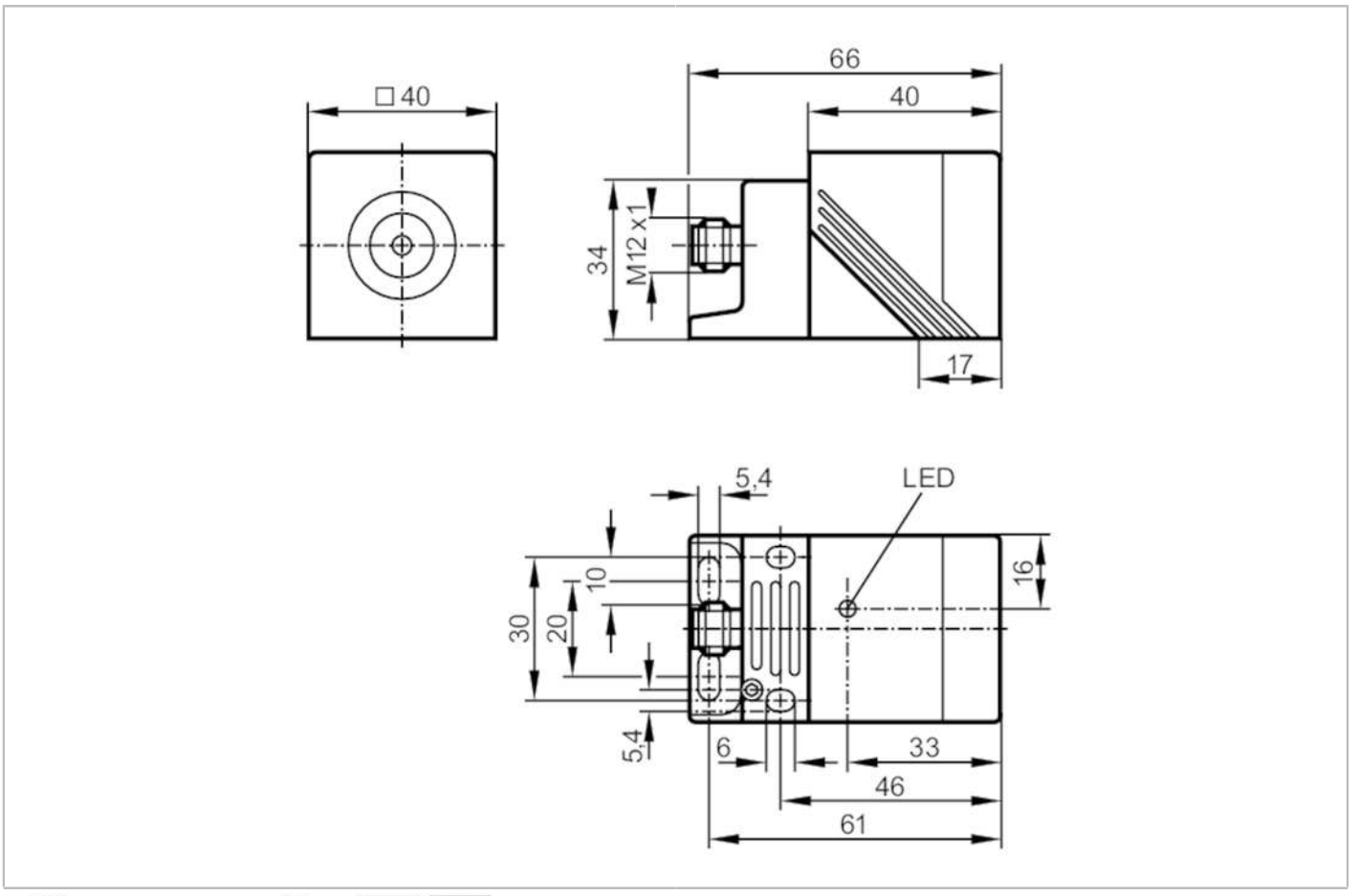

Product characteristics		
Electrical design		NAMUR
Output function		normally closed
Sensing range	[mm]	20
Housing		rectangular
Dimensions	[mm]	40 x 40 x 66
Application		
Special feature		Gold-plated contacts
Electrical data		
Connection to switching amplifiers		yes
Switching amplifiers		connection to certified intrinsically safe circuits with the max. values: U = 15 V / I = 50 mA / P = 120 mW
Nominal voltage DC	[V]	8.2; (1kΩ)
Supply voltage DC	[V]	7.5...30; (when used outside the hazardous area)
Current consumption	[mA]	< 1; (disabled; conductive: > 2,1)
Protection class		III
Outputs		
Electrical design		NAMUR

NM500A

Inductive NAMUR sensor

IMC2020BN/US/2G/1D

Output function		normally closed
Permanent current rating of switching output DC	[mA]	30; (when used outside the hazardous area)
Switching frequency DC	[Hz]	200
Detection zone		
Sensing range	[mm]	20
Real sensing range Sr	[mm]	20 ± 10 %
Accuracy / deviations		
Correction factor		steel: 1 / stainless steel: 0.7 / brass: 0.5 / aluminium: 0.4 / copper: 0.3
Hysteresis	[% of Sr]	1...15
Switch point drift	[% of Sr]	-10...10
Operating conditions		
Ambient temperature	[°C]	-20...70
Protection		IP 67
Tests / approvals		
Approval		BVS 04 ATEX E 091 X; IECEx BVS 06.0003
ATEX marking		II 2G Ex ia IIB T6 Gb
		II 1D Ex ia IIIC T 90°C Da
EMC		EN 60947-5-6
Shock/vibration resistance		30 g (11 ms) / 10-55 Hz (1 mm)
MTTF	[years]	2825
Safety classification		
Max. internal capacitance	[nF]	250
Max. internal inductance	[µH]	450
Mechanical data		
Weight	[g]	181.5
Housing		rectangular
Mounting		flush mountable
Dimensions	[mm]	40 x 40 x 66
Materials		housing: PPE; sensing face: PPE orange; end cap: PPS; mounting adapter: PPS black; screw: steel galvanised
Displays / operating elements		
Display		switching status: 1 x LED, yellow
Accessories		
Items supplied		Mounting bracket: 1
		Allen key: 1
Remarks		
Remarks		5 positions of the active zone possible
Pack quantity		1 pcs.

NM500A

Inductive NAMUR sensor

IMC2020BN/US/2G/1D

Electrical connection - plug

Connector: 1 x M12; coding: A; Locking: brass, white bronze coated; Contacts: gold-plated

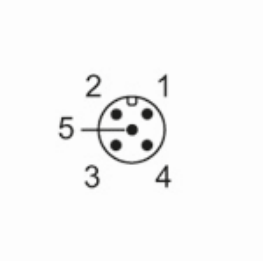

Connection

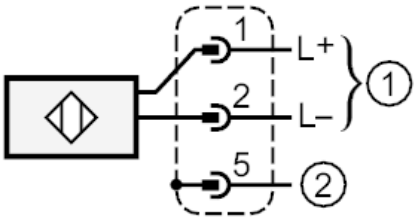

1 =	connection to NAMUR amplifiers
2 =	potential equalisation of plug housing