W3G250-HH07-03

EC axial compact fan - HyBlade

sickle-shaped blades (S series)

ebm-papst Mulfingen GmbH & Co. KG
Bachmühle 2 · D-74673 Mulfingen
Phone +49 7938 81-0
Fax +49 7938 81-110
info1@de.ebmpapst.com
www.ebmpapst.com

Limited partnership · Headquarters Mulfingen
Amtsgericht (court of registration) Stuttgart · HRA 590344

General partner Elektrobau Mulfingen GmbH · Headquarters Mulfingen
Amtsgericht (court of registration) Stuttgart · HRB 590142

Nominal data

Type	**W3G250-HH07-03**
Motor	**M3G055-CF**

Phase		1~
Nominal voltage	VAC	230
Nominal voltage range	VAC	200 .. 240
Frequency	Hz	50/60
Method of obtaining data		ml
Speed (rpm)	min^{-1}	2330
Power consumption	W	83
Current draw	A	0.72
Max. back pressure	Pa	100
Max. back pressure	in. wg	0.4
Min. ambient temperature	°C	-25
Max. ambient temperature	°C	60

ml = Max. load · me = Max. efficiency · fa = Free air · cs = Customer specification · ce = Customer equipment
Subject to change

EC axial compact fan - HyBlade

sickle-shaped blades (S series)

Technical description

Weight	2.12 kg
Size	250 mm
Motor size	55
Rotor surface	Thick-film passivated
Blade material	Press-fitted sheet steel blank, sprayed with PP plastic
Fan housing material	Die-cast aluminum
Number of blades	7
Airflow direction	V
Direction of rotation	Counterclockwise, viewed toward rotor
Degree of protection	IP54
Insulation class	"B"
Moisture (F) / Environmental (H) protection class	H1
Max. permitted ambient temp. for motor (transport/storage)	+ 80 °C
Min. permitted ambient temp. for motor (transport/storage)	- 40 °C
Installation position	Any
Condensation drainage holes	None, open rotor
Mode	S1
Motor bearing	Ball bearing
Technical features	- Output 10 VDC, max. 1.1 mA - Tach output - Power limiter - Motor current limitation - Soft start - Control input 0-10 VDC / PWM - Control interface with SELV potential safely disconnected from supply - Overvoltage detection - Thermal overload protection for electronics/motor - Line undervoltage detection
EMC immunity to interference	According to EN 61000-6-2 (industrial environment)
EMC circuit feedback	According to EN 61000-3-2/3
EMC interference emission	According to EN 55022 (class B, household environment), the application may require ferritic damping in the cable due to the conditions of installation.
Touch current according to IEC 60990 (measuring circuit Fig. 4, TN system)	<= 3.5 mA
Electrical hookup	Terminal strip
Motor protection	Electronic motor protection
With cable	Variable
Protection class	I (with customer connection of protective earth)
Conformity with standards	EN 60335-1; CE
Approval	CSA C22.2 No. 77 + CAN/CSA-E60730-1; CCC; UL 1004-7 + 60730-1; EAC

ebm-papst Mulfingen GmbH & Co. KG · Bachmühle 2 · D-74673 Mulfingen · Phone +49 (0) 7938 81-0 · Fax +49 (0) 7938 81-110 · info1@de.ebmpapst.com · www.ebmpapst.com

EC axial compact fan - HyBlade

sickle-shaped blades (S series)

Product drawing

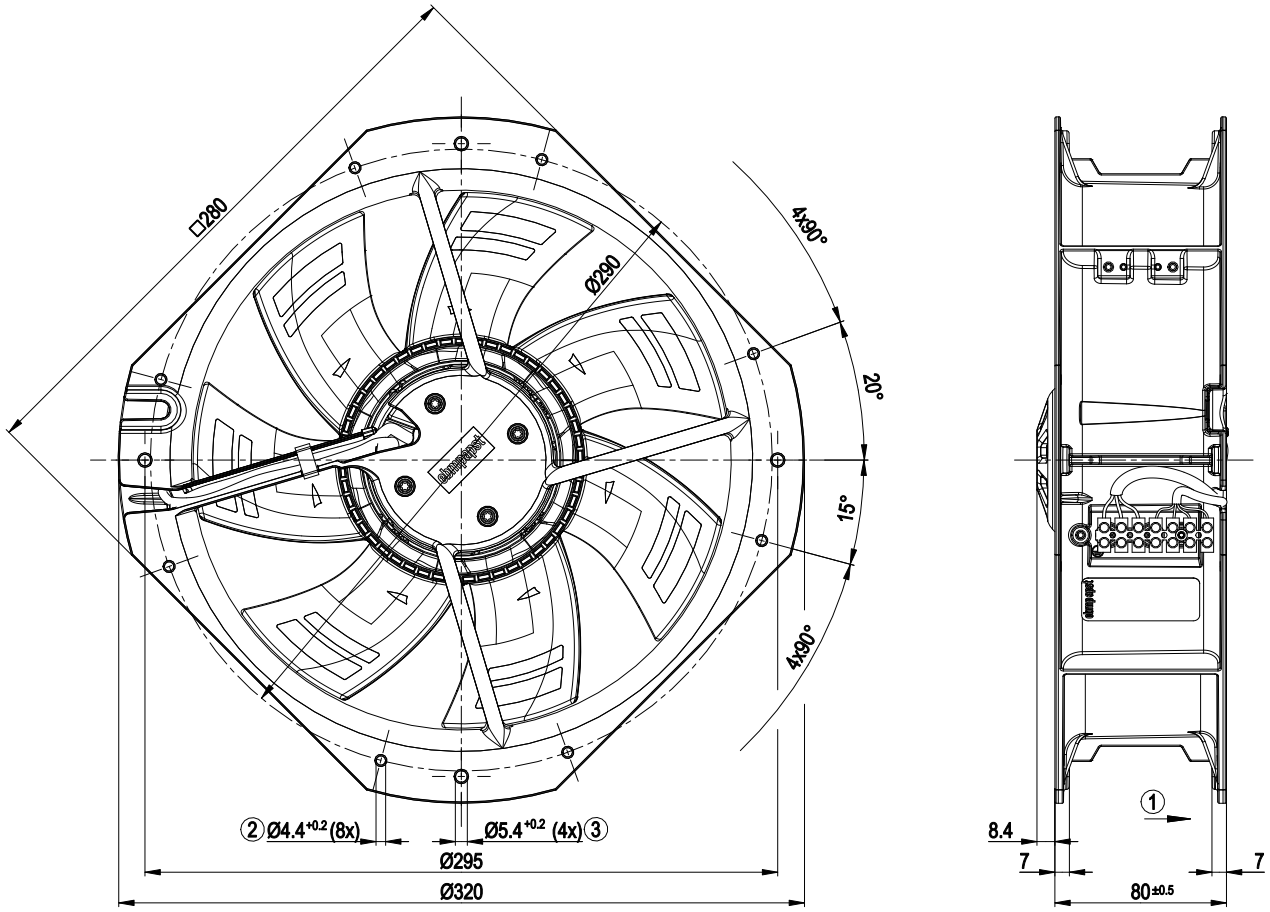

1	Direction of air flow "V"
2	For self-tapping M5 screws
3	For self-tapping M6 screws

ebm-papst Mulfingen GmbH & Co. KG · Bachmühle 2 · D-74673 Mulfingen · Phone +49 (0) 7938 81-0 · Fax +49 (0) 7938 81-110 · info1@de.ebmpapst.com · www.ebmpapst.com

EC axial compact fan - HyBlade

sickle-shaped blades (S series)

Connection diagram

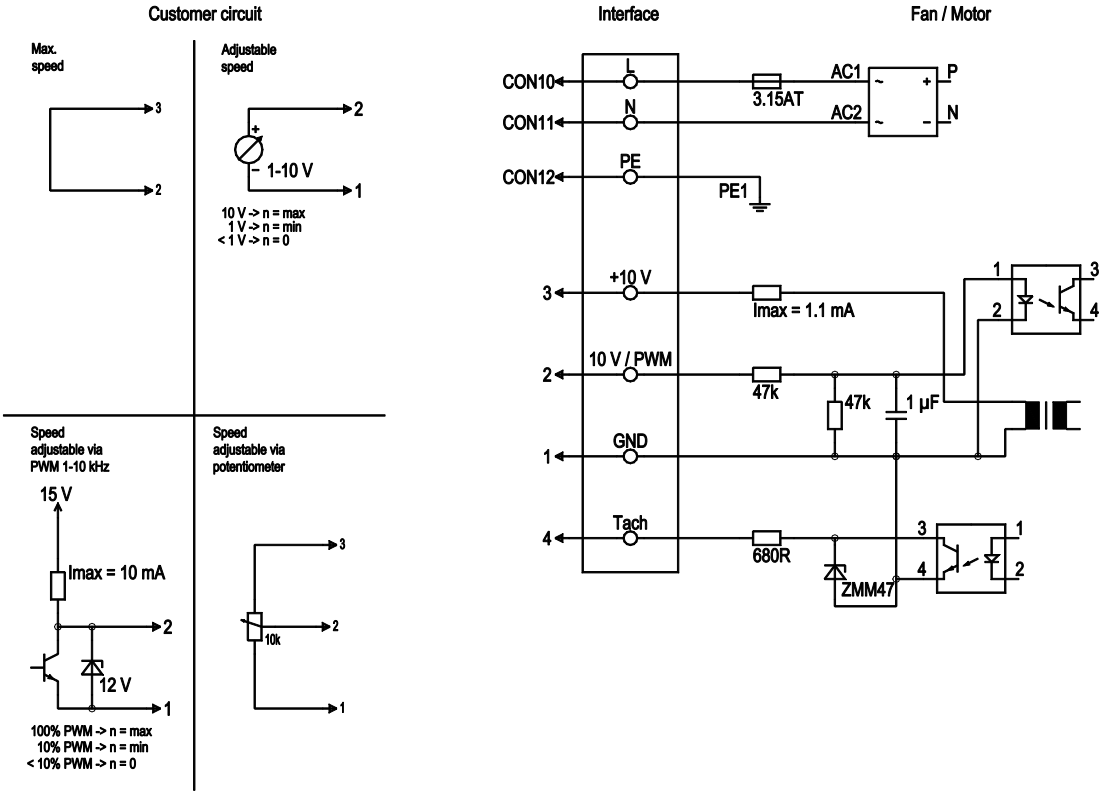

No.	Conn.	Designation	Color	Function/assignment
	CON10	L	black	Power supply 230 VAC, 50-60 Hz, see nameplate for voltage range
	CON11	N	blue	Neutral conductor
	CON12	PE	green/yellow	Protective earth
	1	GND	blue	GND connection for control interface
	2	0-10V PWM	yellow	Control input 0-10 V or PWM, electrically isolated
	3	10 V / max. 1,1 mA	red	Voltage output 10 VDC 1.1 mA, electrically isolated, short-circuit-proof
	4	Tacho	white	Tach output: open collector, 1 pulse per revolution, electrically isolated

ebm-papst Mulfingen GmbH & Co. KG · Bachmühle 2 · D-74673 Mulfingen · Phone +49 (0) 7938 81-0 · Fax +49 (0) 7938 81-110 · info1@de.ebmpapst.com · www.ebmpapst.com

EC axial compact fan - HyBlade

sickle-shaped blades (S series)

Curves: Air performance 50 Hz

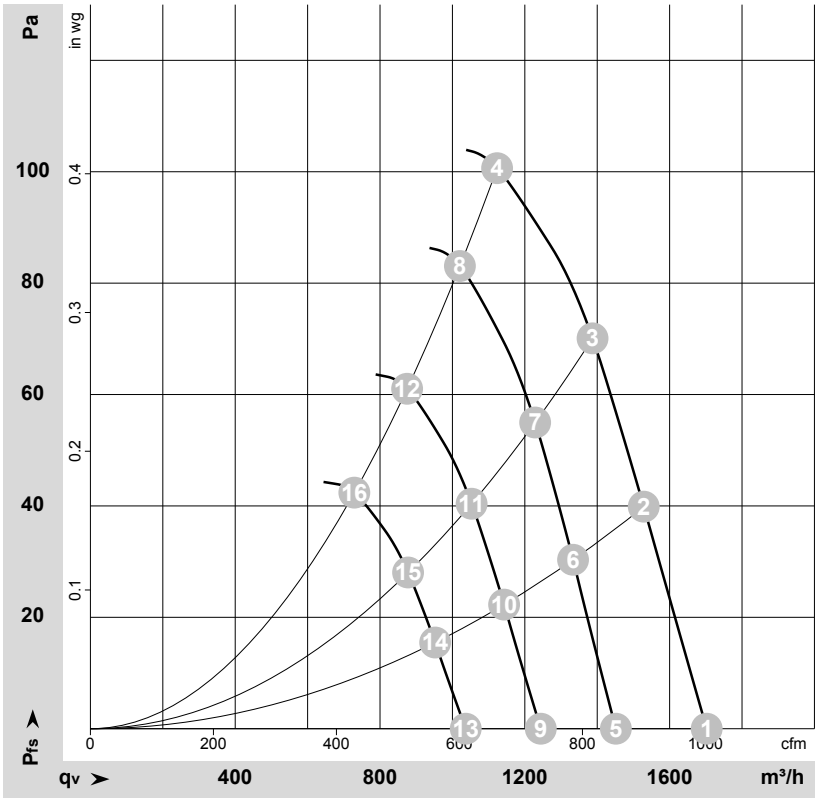

ρ = 1.15 kg/m³ ± 2 %

Measurement: LU-140462-1

Air performance measured according to ISO 5801 installation category A. For detailed information on the measurement setup, contact ebm-papst. Intake sound level: Sound power level according to ISO 13347 / sound pressure level measured at 1 m distance from fan axis. The values given are valid under the specified measuring conditions and may vary due to conditions of installation. For deviations from the standard configuration, the parameters have to be checked on the installed unit.

Measured values

	U	f	n	P_{ed}	I	LpA_{in}	LwA_{in}	q_V	p_{fs}	q_V	p_{fs}
	V	Hz	min^{-1}	W	A	dB(A)	dB(A)	m^3/h	Pa	cfm	in. wg
1	230	50	2465	67	0.59	62	69	1700	0	1000	0.00
2	230	50	2410	75	0.65	61	69	1530	40	900	0.16
3	230	50	2370	81	0.68	61	68	1385	70	815	0.28
4	230	50	2330	83	0.72	62	69	1125	100	660	0.40
5	230	50	2100	42	0.36	58	65	1450	0	855	0.00
6	230	50	2100	50	0.43	58	65	1335	30	785	0.12
7	230	50	2100	56	0.47	58	65	1230	55	725	0.22
8	230	50	2100	62	0.52	59	66	1020	83	600	0.33
9	230	50	1800	26	0.23	54	61	1245	0	730	0.00
10	230	50	1800	31	0.27	54	61	1145	22	675	0.09
11	230	50	1800	35	0.30	54	61	1055	41	620	0.16
12	230	50	1800	39	0.33	55	62	875	61	515	0.24
13	230	50	1500	15	0.13	49	57	1035	0	610	0.00
14	230	50	1500	18	0.16	50	57	950	16	560	0.06
15	230	50	1500	20	0.17	49	57	880	28	515	0.11
16	230	50	1500	23	0.19	50	58	730	43	430	0.17

U = Voltage · f = Frequency · n = Speed (rpm) · P_{ed} = Power consumption · I = Current draw · LpA_{in} = Sound pressure level intake side · LwA_{in} = Sound power level intake side
q_V = Air flow · p_{fs} = Pressure increase

ebm-papst Mulfingen GmbH & Co. KG · Bachmühle 2 · D-74673 Mulfingen · Phone +49 (0) 7938 81-0 · Fax +49 (0) 7938 81-110 · info1@de.ebmpapst.com · www.ebmpapst.com