Product datasheet
Characteristics

XCRA55
limit switch XCR - thermoplastic spring return roller lever large - 2X(1NC+NO)



Main

Range of product	OsiSense XC
Series name	Special format
Product or component type	Limit switch
Product specific application	For hoisting and mechanical handling applications
Device short name	XCR
Sensor design	-
Body type	Fixed
Head type	Rotary head
Material	Metal
Fixing mode	By the body
Movement of operating head	Rotary
Type of operator	Spring return roller lever thermoplastic large
Type of approach	Lateral approach, 2 directions
Electrical connection	Screw-clamp terminals, clamping capacity: 1 x 0.5...2 x 2.5 mm²
Number of poles	4
Contacts type and composition	2 x (1 NC + 1 NO)
Contact operation	Slow-break, break before make
Contact block per direction [control circuit]	2 per direction
Positive opening	With

Complementary

Body material	Zinc alloy
Switch actuation	By any moving part
Cable entry	1 entry tapped for Pg 13.5 cable gland, cable outer diameter: 9…12 mm conforming to NF C 68-300
Contacts insulation form	Zb
Number of steps	1
Positive opening minimum torque	0.75 N.m
Minimum torque for tripping	0.45 N.m
Minimum actuation speed	6 m/min

Disclaimer: This documentation is not intended as a substitute for and is not to be used for determining suitability or reliability of these products for specific user applications

Maximum actuation speed	1.5 m/s
Maximum displacement angle	-55 ° 55 °
Contact code designation	A300, AC-15 (Ue = 240 V), Ie = 3 A conforming to EN/IEC 60947-5-1 appendix A Q300, DC-13 (Ue = 250 V), Ie = 0.27 A conforming to EN/IEC 60947-5-1 appendix A
[Ui] rated insulation voltage	300 V conforming to UL 508 500 V (pollution degree 3) conforming to IEC 60947-1 500 V (pollution degree 3) conforming to VDE 0110 300 V conforming to CSA C22.2 No 14
Maximum resistance across terminals	25 MOhm conforming to IEC 60255-7 category 3
[Uimp] rated impulse withstand voltage	IEC 60664 6 kV IEC 60947-1 6 kV
Short-circuit protection	10 A cartridge fuse, type gG
Electrical durability	5000000 cycles, DC-13, inductive load type, 120 V, 4 W, operating rate <60 cyc/mn, load factor: 0.5 conforming to IEC 60947-5-1 appendix C 5000000 cycles, DC-13, inductive load type, 24 V, 7 W, operating rate <60 cyc/mn, load factor: 0.5 conforming to IEC 60947-5-1 appendix C 5000000 cycles, DC-13, inductive load type, 48 V, 10 W, operating rate <60 cyc/mn, load factor: 0.5 conforming to IEC 60947-5-1 appendix C
Mechanical durability	10000000 cycles
Width	85 mm
Height	95 mm
Depth	75 mm
Net weight	1.155 kg
Terminals description ISO n°1	(21-22)NC (13-14)NO

Environment

Shock resistance	68 gn conforming to IEC 60068-2-27
Vibration resistance	9 gn (f= 10…500 Hz) conforming to IEC 60068-2-6
IP degree of protection	IP54 conforming to IEC 60529
Overvoltage category	Class I conforming to IEC 61140 Class I conforming to NF C 20-030
Ambient air temperature for operation	-25…70 °C
Ambient air temperature for storage	-40…70 °C
Protective treatment	TC
Product certifications	CCC CSA
Standards	EN 60204-1 IEC 60947-5-1 IEC 60204-1 NF C 79-130 EN 60947-5-1 CSA C22.2 No 14

Packing Units

Package 1 Weight	1.101 kg
Package 2 Weight	5.668 kg

Offer Sustainability

EU RoHS Directive	Not applicable, out of EU RoHS legal scope
Environmental Disclosure	Product Environmental Profile

Contractual warranty

Warranty	18 months

Dimensions

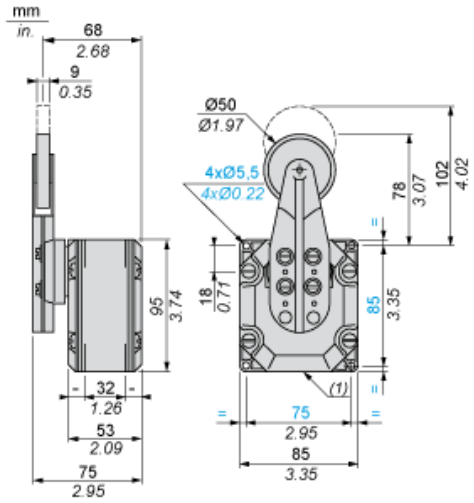

(1) 1 tapped entry for n° 13 cable gland.

Wiring Diagram

Two 2-pole NC + NO Break Before Make, Slow Break

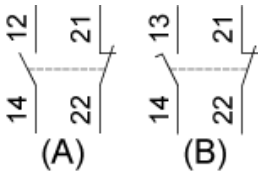

(A) 1st contact
(B) 2nd contact

Functionnal Diagram

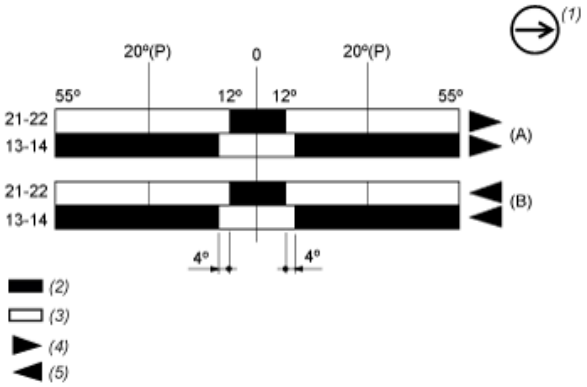

(P) Positive opening point
(A) 1st contact
(B) 2nd contact
(1) NC contact with positive opening operation
(2) Closed
(3) Open
(4) Tripping
(5) Resetting