THE INFORMATION CONTAINED IN THIS DRAWING IS THE SOLE PROPERTY OF L-COM, INC. ANY REPRODUCTION IN PART OR WHOLE WITHOUT THE WRITTEN PERMISSION OF L-COM, INC. IS PROHIBITED.

REVISIONS			
REV	DESCRIPTION	DATE	APPROVED
A	DRAWING REPLACES SDRA15AG-OD1	10/20/14	D. CASTRO
.	.	.	.
.	.	.	.
.	.	.	.

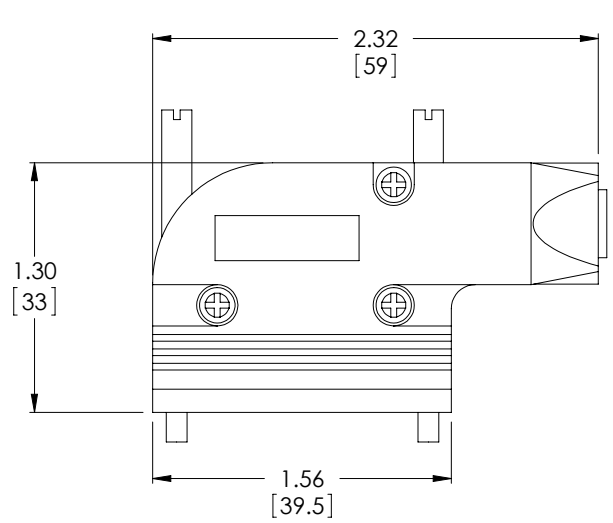

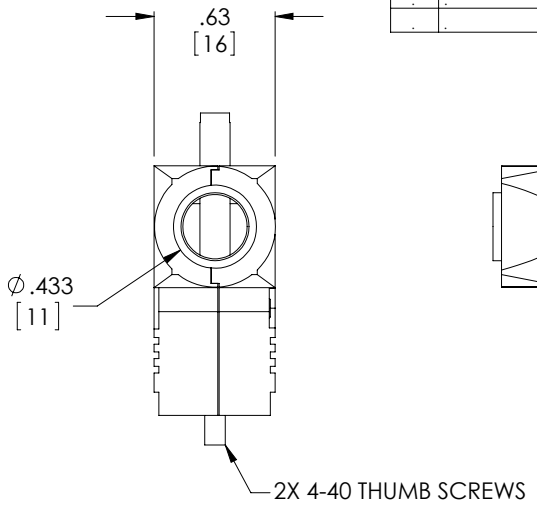

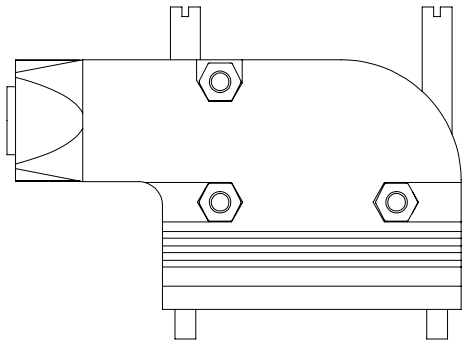

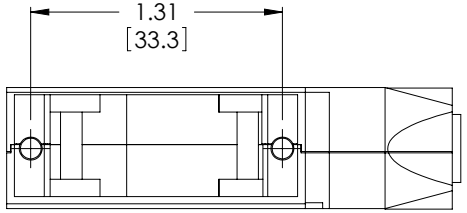

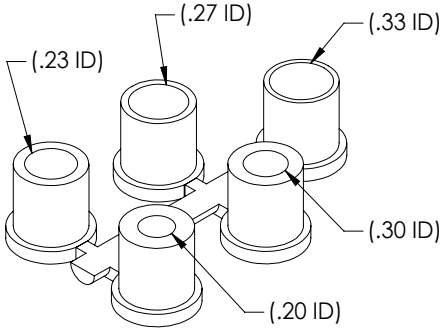

GROMMETS AS SUPPLIED

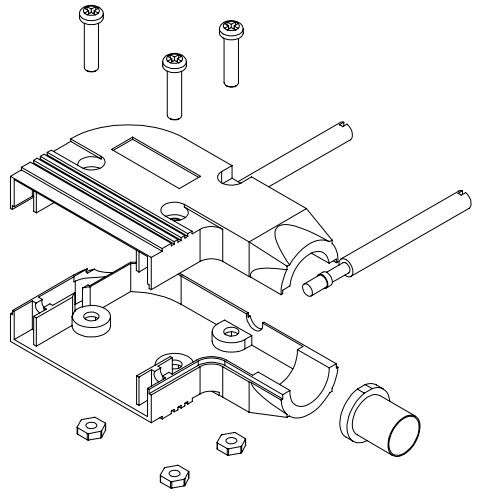

NOTES:

MATERIALS:
HOOD: DIE-CAST ZINC ALLOY
THUMBSCREW: STEEL
ASSEMBLY HARDWARE: STEEL
STRAIN RELIEF GROMMETS: PVC, BLACK

FINISH:
HOOD: NICKEL PLATED, MATTE FINISH ON MAJOR SURFACES
THUMBSCREW: NICKEL PLATED
ASSEMBLY HARDWARE: NICKEL PLATED

MISCELLANEOUS:
INTENDED FOR USE WITH 15 PIN STANDARD AND 26 PIN HIGH DENSITY D-SUBMINIATURE CONNECTORS.
SUPPLIED WITH 5 STRAIN RELIEF GROMMETS FOR CABLING HAVING DIAMETERS RANGING FROM .190 TO .335 INCH.
ALL DIMENSIONS ARE FOR REFERENCE.

REGULATORY COMPLIANCE:
CE2011/65/EU(RoHS DIRECTIVE)

UNLESS OTHERWISE SPECIFIED,
DIMENSIONS ARE IN INCHES [mm]
OVERALL CABLE LENGTH TOLERANCE:
≤12 [305] = +1 [25] / -0
>12 [305] ≤60 [1524] = +2 [51] / -0
>60 [1524] ≤120 [3048] = +4 [102] / -0
>120 [3048] ≤300 [7620] = +6 [152] / -0
>300 [7620] = +5% / -0%
ALL OTHER DIMENSIONAL TOLERANCES:
.X = ± .2 [5.08]
.XX = ± .02 [.51]
.XXX = ±.005 [.13]
PROJECTION

APPROVALS		DATE
DRAWN BY	MCCORMICK	02/27/02
CHECKED BY	D.PARHAM	02/27/02
APPROVED BY	R.CARRICK	02/27/02

CONFIGURATION DETAILS OF UNDIMENSIONED FEATURES MAY VARY

COLOR VARIATIONS MAY OCCUR

L-COM Global Connectivity
45 BEECHWOOD DRIVE
NORTH ANDOVER, MA
01845

CATEGORY
D-SUBMINIATURE

PRODUCT DESCRIPTION
HOOD, DB15 METAL RIGHT ANG

SIZE	FSCM NO.	DWG. NO.	REV.
A	43321	SDRA15AG	A

SCALE: NONE | CAD FILE: SDRA15AG.SLDDRW | SHEET 1 OF 1