Technical Data Sheet

Stainless Steel Range

Issue 1

Stainless Steel - SDS Range

General Description

Switchgear housed in stainless steel enclosures provides the user with an assembly that can be installed in the harshest of environments. Outdoor in unprotected positions or indoor and subject to severe environmental conditions, the standard stainless steel i-switch range with a flush back surface offers the ideal solution. Sealing to IP66 is a standard feature as is the ability to add a selection of auxiliary blocks providing additional contacts and a choice of Neutral assemblies. External mounting feet in stainless steel are offered as an accessory sized to match each enclosure. Stainless steel enclosures are supplied without 'raised dimples' to allow flush mounting.

Safety Features

Padlocking

All items allow for the insertion of up to three padlocks in the 'Off' position thus preventing the isolator being switched to the 'On' position. Standard shackle diameter Ø6.4

Safety Interlock

Screwed lid enclosures have always been open to abuse by having the lid removable when the isolator is 'Off' and padlocked. This would allow the switch shaft to be turned manually to the 'On' position, thus defeating the safety padlocking feature.

The 'i-switch' range now incorporates a mechanical interlock which when a padlock is inserted prevents the enclosure lid from being removed.

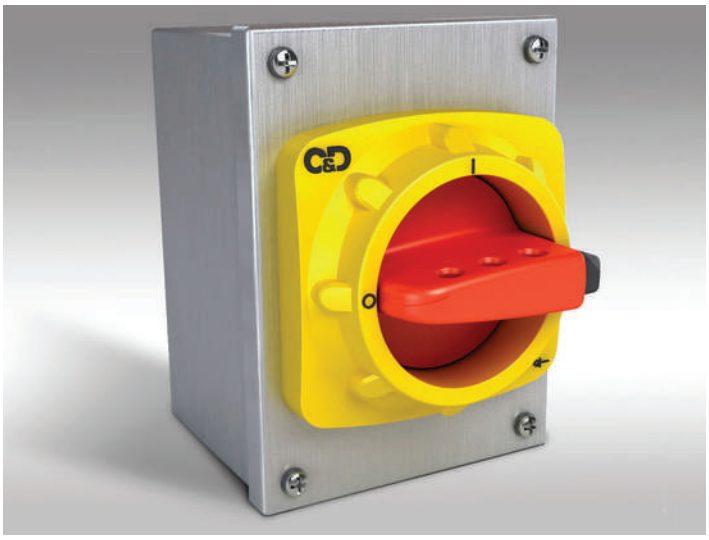

Design Features

Enclosure

Material: Brushed Satin Stainless steel, Grade 304, thickness 1.2mm (Grade 316 to special order).

Entries: Size A - 2 x M20 / Size B - 2 x M20 + 2 x M25

Cover Screws: Stainless Steel (Captive)

External Feet: Size A - Cat. No. **EFA** / Size B - Cat. No. **EFB**

Earthing: Earth continuity terminals are provided in the base and lid of each enclosure.

Changeover Switch-Disconnectors (I-O-II)

Catalogue Numbers

Rating	Format	Interior Switch product range	Cat. No.	Enclosure Size
20A	2P	GX20	SCODS202	A
	3P	GX20	SCODS203	
	4P	GX20	SCODS204	
40A	2P	GX40	SCODS402	B
	3P	GX40	SCODS403	
	4P	GX40	SCODS404	

'N' = switched neutral (Early make, late break)
'NL' = Unswitched neutral
'EB' = Early break auxiliary contacts

Standard Switch-Disconnectors (O-I)

Catalogue Numbers

Rating	Format	Interior Switch product range	Cat. No.	Enclosure Size
20A	6P	GX20	SDS206	A
	6P+2EB Aux	GX20	SDS206EB	
25A	2P	CS25	SDS252	A
	3P	CS25	SDS253	
	3P+NL	CS25	SDS253NL	
	3P+N	CS25	SDS253N	
	3P+2EB Aux	CS25	SDS253EB	
32A	2P	CS32	SDS322	A
	3P	CS32	SDS323	
	3P+NL	CS32	SDS323NL	
	3P+N	CS32	SDS323N	
	3P+2EB Aux	CS32	SDS323EB	
40A	2P	CS40R	SDS402	B
	3P	CS40R	SDS403	
	3P+NL	CS40R	SDS403NL	
	3P+N	CS40R	SDS403N	
	3P+2EB Aux	CS40R	SDS403EB	
	6P	GX40	SDS406	
	6P+2EB Aux	GX40	SDS406EB	
63A	2P	CS63	SDS632	B
	3P	CS63	SDS633	
	3P+NL	CS63	SDS633NL	
	3P+N	CS63	SDS633N	
	3P+2EB Aux	CS63	SDS633EB	

CRAIG & DERRICOTT

www.craigandderricott.com

Craig & Derricott Ltd
Hall Lane, Walsall Wood,
Walsall, West Midlands WS9 9DP
t: +44(0)1543 375541 f: +44(0)1543 361619
e: sales@craigandderricott.com

Sloping Roof - SDSSR Range

General Description

Based upon Craig & Derricott's 'i-switch' range of isolation equipment, the specially designed stainless steel 'sloping roof' enclosure is ideally suited for hygienic environments with their associated severe cleaning routines. The design has been created to minimise areas where dirt can accumulate and incorporates a flush rear surface and universal fixing that include IP66 sealings.

Safety Features

Padlocking

All items allow for the insertion of up to three padlocks in the 'Off' position thus preventing the isolator being switched to the 'On' position. Standard shackle diameter Ø6.4

Safety Interlock

Screwed lid enclosures have always been open to abuse by having the lid removable when the isolator is 'Off' and padlocked. This would allow the switch shaft to be turned manually to the 'On' position, thus defeating the safety padlocking feature.

The 'i-switch' range now incorporates a mechanical interlock which when a padlock is inserted prevents the enclosure lid from being removed.

Design Features

Enclosure

Material: Brushed Satin Stainless steel, Grade 316, thickness 1.2mm body, 1.5mm lid. (15° Slope)

Entries: The enclosures are supplied as standard without entries. Optional pre-drilled bottom entries can be supplied as follows:-

Size A - 2xM20 (add M20 to cat No.)
Size B - 2xM25 (add M25 to cat No.)
e.g. SDSSR322/M20, SDSSR403N/M25

Cover Screws: Stainless Steel (Captive)

Fixings: Universal fixings across the range.

Earthing: Earth continuity terminals are provided in the base and lid of each enclosure.

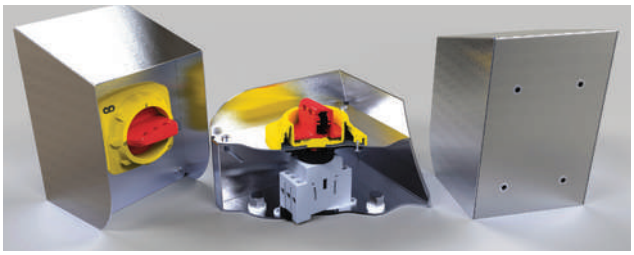

Section view showing the enclosures flush rear face with 'sealed' fixings that ensure the IP66 seal is maintained.

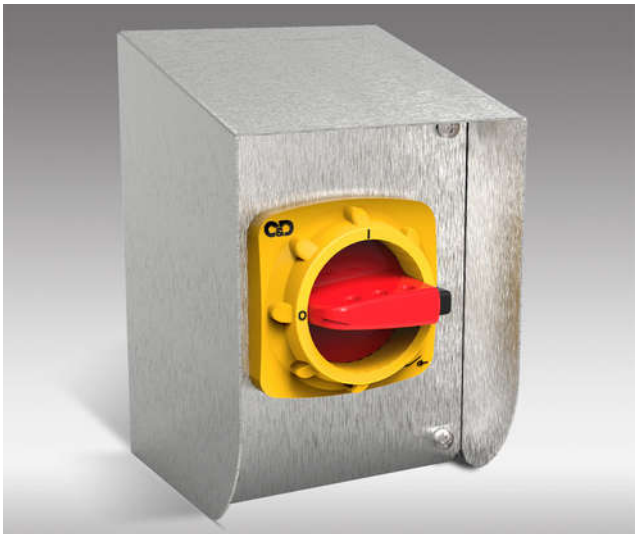

Switch-Disconnectors (O-I)

Catalogue Numbers

Rating	Format	Interior Switch product range	Cat. No.	Encl. Size (IP66)
20A	6P	GX20	SDSSR206	A
	6P+2EB AUX	GX20	SDSSR206EB	
25A	2P	CS25	SDSSR252	A
	3P	CS25	SDSSR253	
	3P+2EB AUX	CS25	SDSSR253EB	
	3P+N	CS25	SDSSR253N	
32A	2P	CS32	SDSSR322	A
	3P	CS32	SDSSR323	
	3P+2EB AUX	CS32	SDSSR323EB	
	3P+N	CS32	SDSSR323N	
40A	2P	CS40R	SDSSR402	B
	3P	CS40R	SDSSR403	
	3P+2EB AUX	CS40R	SDSSR403EB	
	3P+N	CS40R	SDSSR403N	
	6P	GX40	SDSSR406	
	6P+2EB AUX	GX40	SDSSR406EB	
63A	2P	CS63	SDSSR632	B
	3P	CS63	SDSSR633	
	3P+2EB AUX	CS63	SDSSR633EB	
	3P+N	CS63	SDSSR633N	
80A	2P	CS80	SDSSR802	B
	3P	CS80	SDSSR803	
	3P+2EB AUX	CS80	SDSSR803EB	
	3P+N	CS80	SDSSR803N	

'N' - switched neutral (Early make, late break)
'EB' = Early break auxiliary contacts

CRAIG & DERRICOTT

www.craigandderricott.com

Craig & Derricott Ltd
Hall Lane, Walsall Wood,
Walsall, West Midlands WS9 9DP
t: +44(0)1543 375541 f: +44(0)1543 361619
e: sales@craigandderricott.com

Accessories (Applicable for type CS interiors only)

Description	Cat. No.
Auxiliary Contact - 2 Early Break	SAUX2EB
Auxiliary Contact - 1 N/O + 1 N/C	SAUXCO
25A - 40A Compact Neutral (Unswitched)	SNLC40
63A Neutral (Unswitched)	SNL63
25A Neutral (Switched)	SSP25
32A & 40A Neutral (Switched)	SSP40
63A Neutral (Switched)	SSP63

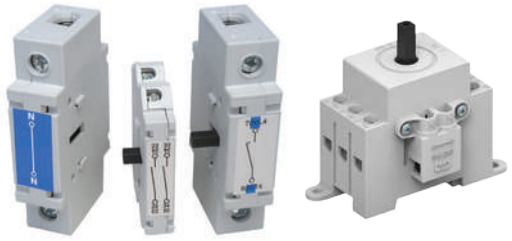

Neutral Link (Unswitched) | 2 Early Break Auxiliary | Neutral Link (Switched)

SNLC40 Neutral Link

Technical Specification

Data supplied against tests to IEC/BS EN 60947-3

Application	Sym.	Unit	Category	Rating 20A	25A	32A		40A		63A		80A	100A
Switch product range	-	-		GX20	CS25	GX32	CS32	GX40	CS40R	GN63	CS63	CS80	CS100
Rated thermal current	I_{the}	A		20	25	32	32	40	40	63	63	80	100
Rated insulation voltage	U_i	V		690	690	690	690	690	690	690	690	690	1000
Rated impulse voltage	U_{imp}	kV		6	6	6	6	6	6	6	6	6	8.0
Rated operational power (3 phase AC)		kW	380/440 - AC23	7.5	11	15	15	18.5	15	30	25	30	59
			500V - AC23	7.5	15	15	15	15	15	30	30	37	63
			690V - AC23	7.5	15	15	15	15	15	30	30	30	51
Rated short time withstand current (1 sec)	I_{cw}	A		250	500	800	600	800	600	1600	1300	1400	2600
Max. fuse size for short circuit protection (gG Characteristic)		kA	10kA	20	35	35	35	40	40	63	80	80	160
			25kA	16	32	35	32	35	32	63	63	63	160
			50kA	-	32	-	32	-	32	63	63	63	160
Recommended connecting capacity		-	Terminal type										
		mm^2	Flexible cable	2.5 x 2	6	6 x 2	6	6 x 2	6	10	16	16	50
		mm^2	Rigid cable	2.5 x 2	10	10 x 2	10	10 x 2	10	16	25	25	70
		Nm	Tightening torque	1.0	1.2	1.0	1.2	1.0	1.2	1.2	1.2	1.2	2

Dimensions

Stainless Steel

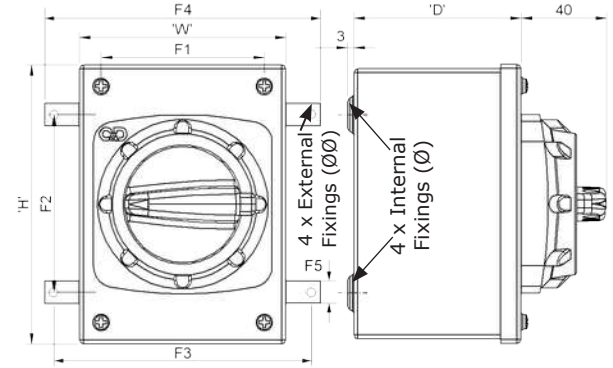

	Overall Dims.			Internal Fixings			External EFA/EFB Fixings			
	H	W	D	F1	F2	Ø	F3	F4	F5	ØØ
Size A	135	100	80	51	86	5.5	126	140	16	6.35
Size B	175	130	100	81	126	5.5	155	178	16	6.35

Sloping Roof

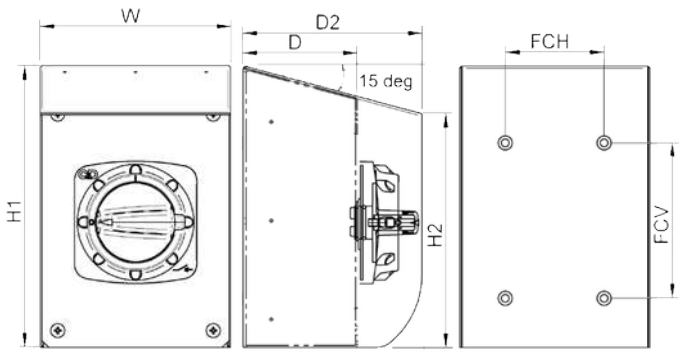

	Overall Dims.					Internal Fixings		
	H1	H2	W	D	D2	FCH	FCV	Ø
Size A	200	165	135	80	127	70	110	5.5
Size B	240	200	185	100	147	90	130	5.5

CRAIG & DERRICOTT
www.craigandderricott.com
Craig & Derricott Ltd
Hall Lane, Walsall Wood,
Walsall, West Midlands WS9 9DP
t: +44(0)1543 375541 f: +44(0)1543 361619
e: sales@craigandderricott.com