

MLB 50/1 V schwarz/black

Industrial Connectors:Measuring and Testing Equipment:Measuring leads:4 mm sliding sleeve system

Product description	
Description	Contact-protected measuring lead, at either end: 4 mm diameter plug, insulated by latching and sprung insulated sleeve which is only released by pressure on the side-mounted locking spring. 4 mm diameter nickel-plated. Highly flexible, double insulated stranded conductor. Color indicator for the recognition of damage to the isolation. Socket to the far plug-inness.
Type	MLB 50/1 V schwarz/black
Order No.	973 645-100
System	4 mm sliding sleeve system
Cable length	50 cm
Conductor size	1 mm²
Cable material	PVC
Cable color	black
Housing Color	black
Color types	
Other standard types	red color, order no. 973 645-101; blue color, order no. 973 645-102; yellow color, order no. 973 645-103; green color, order no. 973 645-104
Drawing	

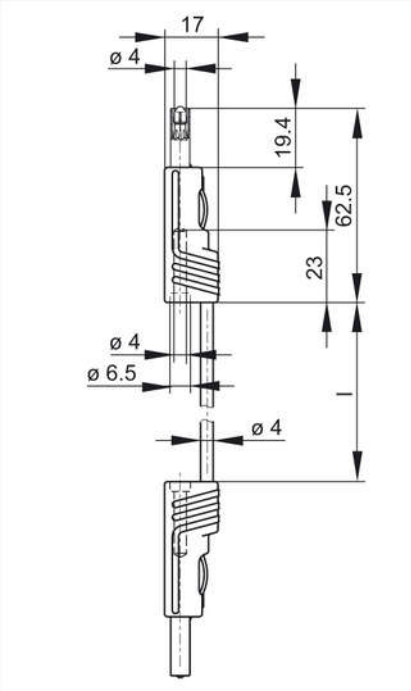

Technical data	
Pin dimensions	4 mm
Type of contact	pin (spring-loaded)
Type of termination	4 mm diameter pin and socket
Cable type	LEH-XY
Cable specification	highly flexible lead
Wire stranding	259 x 0,07
Rated voltage	DC 60 V
Rated current	16 A
Contact resistance	13 mOhm
Material	
Contact material	copper beryllium
Contact surface material	nickel-plated
Environmental conditions	
Temperature range	-15 °C to +70 °C
Inflammability class	
Cable	94 HB