8EXF400.0000-00

1 General information

The fan module is used to cool ACOPOS P3 drive systems and can be installed on 8EMFxxx000.0000-1 mounting plates. [1)]

Information:

ACOPOS P3 mounting plate 8EMF00x0000.0000-1 can only be used together with fan modules 8EXF400.0000-00 and 8EXF500.0000-00!

For optimal availability of the ACOPOS P3 drive system, fan modules 8EXF400.0000-00 and 8EXF500.0000-00 must be switched on at all times.

2 Order data

Order number	Short description	Figure
	Fan modules	
8EXF400.0000-00	ACOPOS P3 fan module for mounting plate 8EMFxxx0000.0000-1 double-width	
	Optional accessories	
	I/O supply cable	
X67CA0P00.0002	Power connection cable, 4-pin, straight, 0.25 m	
X67CA0P10.0002	Power connection cable, 4-pin, angled, 0.25 m	
X67CA0P20.0010	Power attachment cable, 4-pin, straight, 1.0 m	
X67CA0P20.0020	Power attachment cable, 2.0 m	
X67CA0P20.0050	Power attachment cable, 4-pin, straight, 5 m	
X67CA0P20.0100	Power attachment cable, 4-pin, straight, 10 m	

Table 1: 8EXF400.0000-00 - Order data

Mounting plate	Fan modules
8EMF0010000.0000-1	1x 8EXF500.0000-00
8EMF0020000.0000-1	1x 8EXF400.0000-00
8EMF0040000.0000-1	2x 8EXF400.0000-00
8EMF0060000.0000-1	3x 8EXF400.0000-00

Table 2: Recommended number of fan modules depending on the 8EMF mounting plate

Information:

X67CA0P10 and X67CA0P20/X67CA0P30 I/O power supply cables can be used for wiring 8EXF400.0000-00 fan modules. For details, see section "Wiring".

[1)] Except for mounting plate 8EMF0010000.0000-1

3 Technical data

Order number	8EXF400.0000-00
General information	
Short description	ACOPOS P3 fan module for mounting plate 8EMFxxx0000.0000-1
Certifications	
CE	Yes
UKCA	Yes
UL	cULus E225616 Power conversion equipment
24 VDC power supply	
Input voltage	24 VDC +10% / -25%
Connection	1x 4-pin female M8 connector 1x 4-pin male M8 connector
Power consumption	7 W
Operating conditions	
Degree of protection per EN 60529	IP54 when connected
Ambient conditions	
Temperature	
Operation	
Nominal	5 to 40°C
Maximum	55°C
Storage	-25°C to 55°C
Transport	-25°C to 70°C
Relative humidity	
Operation	5 to 85%
Storage	5 to 95%
Transport	Max. 95% at 40°C
Mechanical properties	
Volumetric flow rate	195 m^3/h @ 0 Pa 78 Pa @ 0 m^3/h
Operating noise	47.5 dB(A)
Service life	
At 40°C	75,000 h
Dimensions	
Width	135 mm
Height	200 mm
Depth	92 mm
Weight	0.5 kg

Table 3: 8EXF400.0000-00 - Technical data

4 Wiring

4.1 8EXF400.0000-00 - Pinout overview

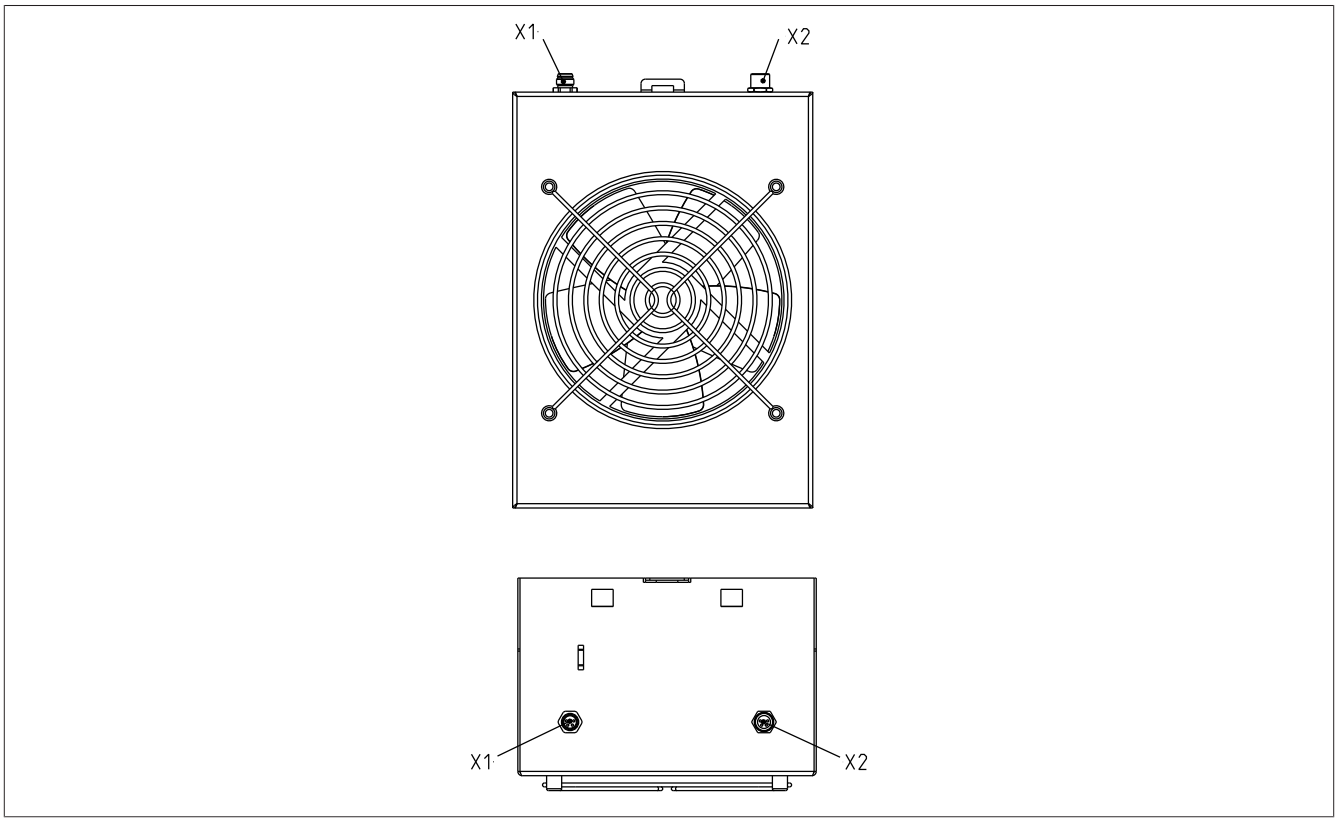

Figure 1: 8EXF400.0000-00 - Pinout overview

4.2 Connector X1 - Pinout

X1	Pin	Description	Function
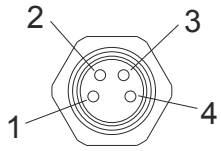	1	24 V	Fan power supply +24 VDC
	2	24 V	Fan power supply +24 VDC
	3	GND	Fan power supply GND
	4	GND	Fan power supply GND

Table 4: Connector X1 - Pinout

4.3 Connector X2 - Pinout

X2	Pin	Description	Function
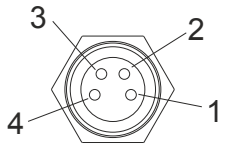	1	24 V	Fan power supply +24 VDC
	2	24 V	Fan power supply +24 VDC
	3	GND	Fan power supply GND
	4	GND	Fan power supply GND

Table 5: Connector X2 - Pinout

4.4 Wiring example

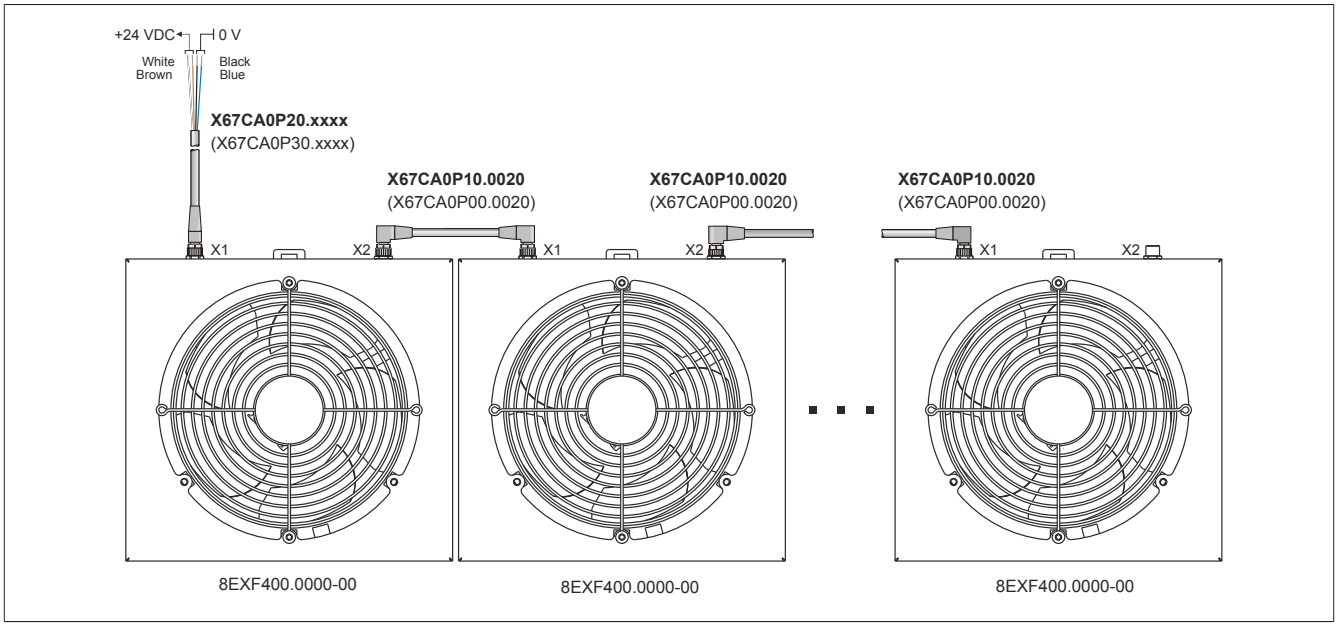

Figure 2: 8EXF400.0000-00 - Wiring example

Note:

Fan module 8EXF is only permitted to be supplied with 24 V when installed!

Information:

Up to 15 8EXF400.0000-00 fan modules are permitted to be connected in parallel.

Information:

The 24 VDC power supply for 8EXF400.0000-00 fan modules can be supplied via connector X3 on an 8B0C ACOPOSmulti auxiliary supply module.

Information:

Within the scope of UL, the 24 VDC power supply of the fan modules must be protected. The nominal current of the fuse used is not permitted to exceed 4 A.

5 Installing fan module 8EXF400.0000-00

Procedure:

1. Disconnect the ACOPOS P3 drive system from the power system and secure it against being switched on again.

> **Danger!**
>
> **Before starting work, disconnect the power supply and wait 5 minutes to ensure that the DC bus of the ACOPOS P3 drive system has discharged. Observe regulations!**

2. Slide the bottom of the fan module at position (❶) between the first two plates on the heat sink of mounting plate 8EMFxxx000.0000-1 and then insert the top as shown in (❷) until the snap-fit connectors click into place.



3. Repeat step 2 until all fan modules have been installed. The following fan modules must be placed between the next available plates on mounting plate 8EMFxxx000.0000-1.
4. Cable all fan modules (see section Wiring example).

6 Replacing fan module 8EXF400.0000-00

Procedure:

Required tools: Flat-blade screwdriver

1. Disconnect the ACOPOS P3 drive system from the power system and secure it against being switched on again.

> **Danger!**
>
> **Before starting work, disconnect the power supply and wait 5 minutes to ensure that the DC bus of the ACOPOS P3 drive system has discharged. Observe regulations!**

2. Disconnect the connectors from the X1 and X2 connectors on the fan module.
3. The fan module is snapped into mounting plate 8EMFxxx000.0000-1 using two snap-fit connectors. Use a flat-blade screwdriver to push up the clip marked with the error to loosen the snap-fit connectors. While doing so, carefully tip the fan module backwards and remove from the mounting plate's heat sink.

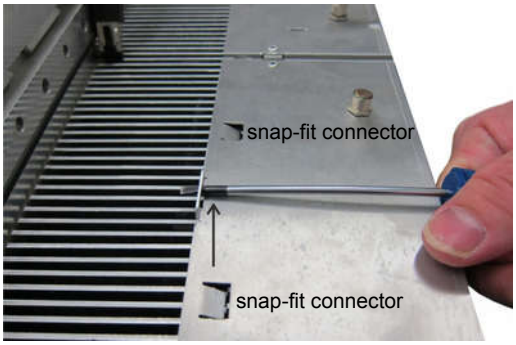



4. Slide the bottom of the new fan module at position (❶) between the plates on the heat sink of mounting plate 8EMFxxx000.0000-1 and then insert the top on the mounting plate's heat sink as shown in (❷) until the snap-fit connectors click into place.



5. Repeat steps 2 to 4 for all other fan modules that need to be replaced.
6. Cable all replaced fan modules (see section Wiring example).



Information:

8EXF400.0000-00 fan modules have an average service life of approx. 75,000 h. B&R recommends replacing all fan modules on mounting plate 8EMFxxx000.0000-1 at the same time.