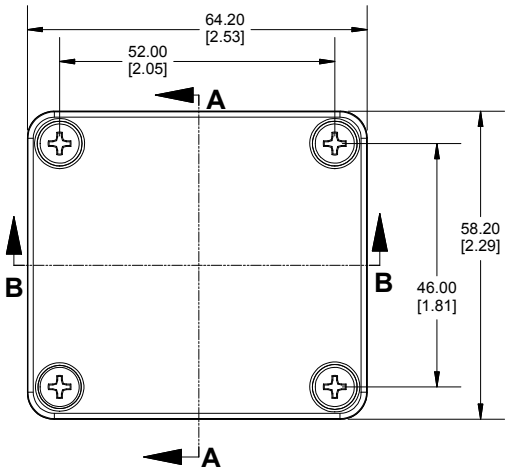

TOP VIEW

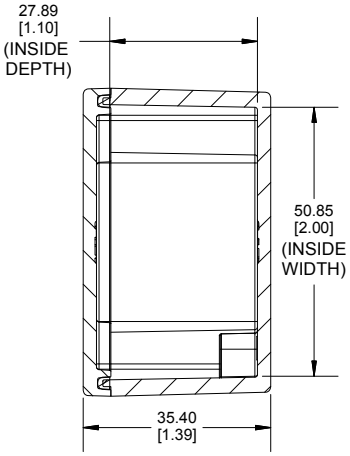

SECTION A-A
END VIEW

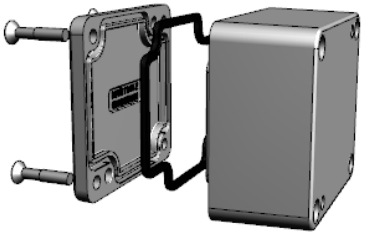

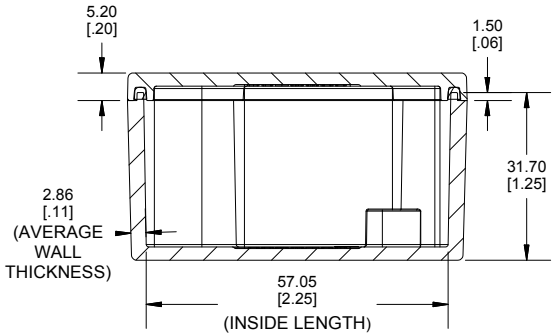

SECTION B-B
SIDE VIEW

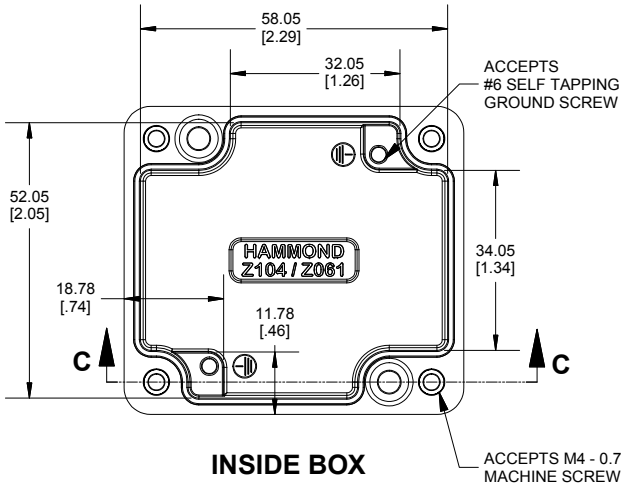

INSIDE BOX

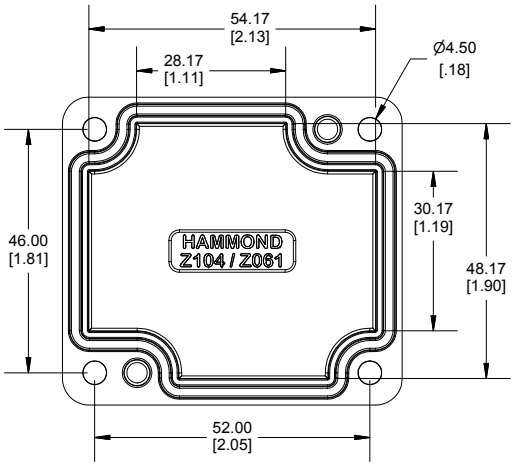

INSIDE LID

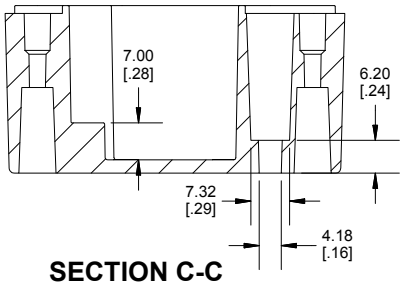

SECTION C-C
MOUNTING HOLE

c UL US LISTED
FILE #E65324
NEMA 4, 4X, 6, 6P

Enclosures can be Factory Modified (Milling, Drilling, Printing etc.)
Contact Factory mjm@hammondmfg.com for quotes
Solid models of this enclosure available in STEP or IGES.
(Part number and text placement/orientation on our products are subject to change, we do not recommend using them as a locating reference for modification purposes)

NOTE
Purchased assembly includes box, lid, silicone gasket, 4 cover screws and 2 ground screws with washers. Box and lid are made from Diecast Aluminum Alloy.
Recommended cover screw Torque 5-7.5 lbf.in (50 -75 cN.m)

1590Z061	
1590Z061 Enclosure	
Natural Enclosure	1590Z061
Black Enclosure	1590Z061BK
Grey Enclosure - RAL7001 Gloss	1590Z061GY
ACCESSORIES	
Pre-Formed Silicone Gasket (2 Pack)	1590Z061G
Ground Hardware (50 Pack) [Copper #6-32X5/16 Self-Tapping / #6 Bronze lock Washer]	SCG060-50
Stainless Steel Cover screws (50 pkg) [M4 - 0.7 x 20mm]	SC1550Z103-50

Dimensions:
mm
[inches]

HAMMOND MANUFACTURING®

1590Z061

www.hammondmfg.com