RE55 CONTROLLER

LUMEL

Features:

on/off algorithm

Password protection

PID algorithm

Auto-tuning

Input:

Outputs:

SSR output

Galvanic isolation:

Supply



- Temperature input (thermocouple or resistance thermometer.
- Control output: relay or transistor.
- Alarm output: relay (option).
- Control: on/off of PID with auto-tuning (option).
- Setting of the set point value by means of the knob.
- Programming push-buttons (option).

Example of application

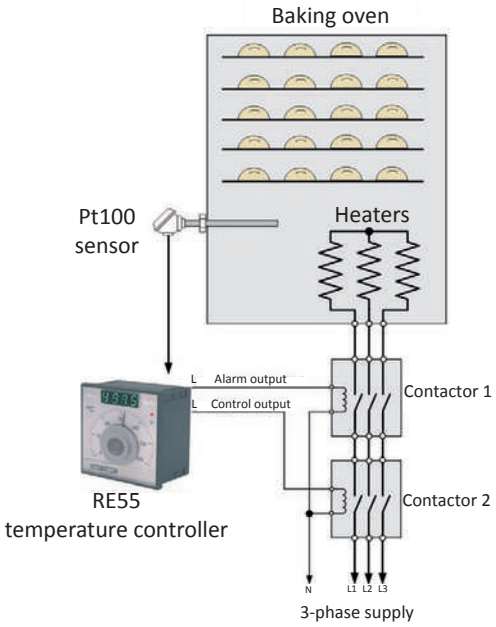

Temperature control in a baking oven.

Input

Input type	Range	Error	Basic error
Pt100	-50 .. 100°C	0.8°C	Compensation of thermocouple cold junction temperature changes: ≤ 2°C Ambient temperature change: ≤ 100% of basic error/ 10 K Resistance thermometer line resistance change: ≤ 50% of basic error
Pt100	0 .. 100°C	0.5°C	
Pt100	0 .. 150°C	0.8°C	
Pt100	0 .. 250°C	1.3°C	
Pt100	0 .. 400°C	2.0°C	
Pt100	0 .. 600°C	3.0°C	
Fe-CuNi (J)	0 .. 250°C	2.0°C	
Fe-CuNi (J)	0 .. 400°C	2.0°C	
Fe-CuNi (J)	0 .. 600°C	3.0°C	
Fe-CuNi (J)	0 .. 900°C	4.0°C	
NiCr-NiAl (K)	0 .. 600°C	3.0°C	
NiCr-NiAl (K)	0 .. 900°C	4.0°C	
NiCr-NiAl (K)	0 .. 1300°C	6.0°C	
PtRh10-Pt (S)	0 .. 1600°C	8.0°C	

Output

Output type	Properties	Remarks
Relay (control)	- 1 output	switch-over contact, 2 A/ 230 V
Transistor voltage (control)	- 1 output 5 V	resistance limiting the current 10 Ω, without isolation from input side
Relay (alarm)	- 1 output	NO contact, 1 A/ 230 V

Export department:
+48 68 45 75 139/ 305/ 321/ 368
Fax: +48 68 32 54 091
e-mail: export@lumel.com.pl

„LUMEL" S.A.
ul. Słubicka 1
65-127 Zielona Góra
POLAND
WWW.LUMEL.COM.PL

RE55 CONTROLLER

External features

Readout field	LED	10 mm, 4 digits
Overall dimensions	96 × 96 × 65 mm	
Weight	< 0.3 kg	
Protection grade	from frontal side: IP40	from terminal side: IP20

Rated operating conditions

Supply voltage	85 .. 253 V d.c./a.c.	frequency: 40 .. 440 Hz
Temperature	ambient: 0...23...50°C	storage: -20...70°C
Humidity	< 85% without condensation	
Operating position	any	
External magnetic field	< 400 A/m	
Power input	< 4 VA	

Safety and compatibility requirements

Electromagnetic compatibility	noise immunity	acc. to EN 61000-6-2
	noise emissions	acc. to EN 61000-6-4
Pollution level	2	
Installation category	III	
Maximum phase-to-earth operating voltage	for supply circuit, output: 300 V	for input circuits: 50 V
Altitude above sea level	up to 2000 m	

Connection diagrams

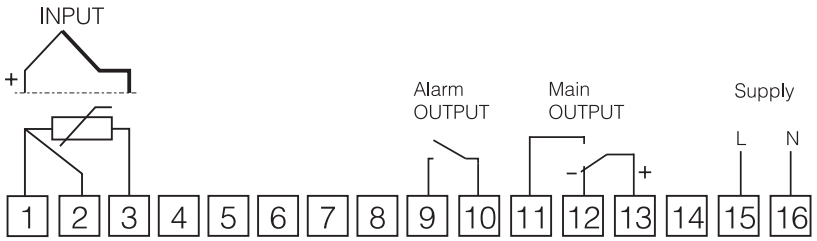

Ordering

		RE55 -	XX	X	X	XX	X
Input:							
Pt100/1.3850	-50..100°C	01					
	0..100°C	02					
	0..150°C	03					
	0..250°C	04					
	0..400°C	05					
	0..600°C	06					
Fe-CuNi (J)	0..250°C	07					
	0..400°C	08					
	0..600°C	09					
	0..900°C	10					
NiCr-NiAl (K)	0..600°C	11					
	0..900°C	12					
	0..1300°C	13					
PtRh10-Pt (S)	0..1600°C	14					
as per order*		99					
Option:							
on/off controller				1			
PID controller				2			
configurable controller with push-buttons				3			
Control output:							
relay					1		
voltage 0/5 V					2		
Version:							
standard						00	
custom-made*						XX	
Additional quality requirements:							
without additional quality requirements							8
with an extra inspection quality certificate							7
acc. to customer's request**							X

* after agreeing with the manufacturer
** the ordering code will be established by the manufacturer

Order example:
The code: **RE55 - 02 1 1 00 8** means:
RE55 - controller of RE55 type
02 - input Pt100: 0..100°C
1 - on/off control
1 - control output: relay
00 - standard version
8 - without additional quality requirements.

See also:



Temperature sensors.



SSR relay of LU series.



Controllers RE71 and RE81.



For more information about LUMEL's products please visit our website: www.lumel.com.pl

Export department:
+48 68 45 75 139/ 305/ 321/ 368
Fax: +48 68 32 54 091
e-mail: export@lumel.com.pl

„LUMEL" S.A.
ul. Słubicka 1
65-127 Zielona Góra
POLAND
WWW.LUMEL.COM.PL