LAPP GROUP	**DATA SHEET**	5311 1407
	SKINTOP® ST-HF-M	valid from: 14.12.2016

The SKINTOP® ST-HF-M is a metric cable gland made of polyamide which is flame retardant and non-halogen. It is designed for a universal use, in premises where the subject is human protection, such as office and public buildings, undergrounds tunnels, aeration systems, as well as in premises where the subject is protection of properties values, such as industrial installations, storehouses, supply installations and ship building.



Components:

Gland body	Polyamide, halogen-free, V0 acc. to UL 94
Cap nut	Polyamide, halogen-free, V0 acc. to UL 94
Sealing ring	Special elastomer, halogen-free, flame retardant
O-ring	Special elastomer, halogen-free, flame retardant

Technical features:

Connecting thread	M12x1,5 up to M63x1,5 acc. to EN 60423
Functional thread	Multi-start trapezoidal thread
Protection class	IP68 - 5 bar, test acc. to EN 60529
Strain relief	Cat. A in acc. to EN 50262
Temperature range	dynamic: -20°C up to +100°C Static: -40°C up to +100°C
Colour	RAL 7035

Approvals:

Norm references:

Tested in according to: DIN EN 45545-2 (08/2013)
“Railway applications – Fire protection to railway vehicles – Part 2: Requirements for fire behavior of materials and components“

For more information please see our current catalogue.

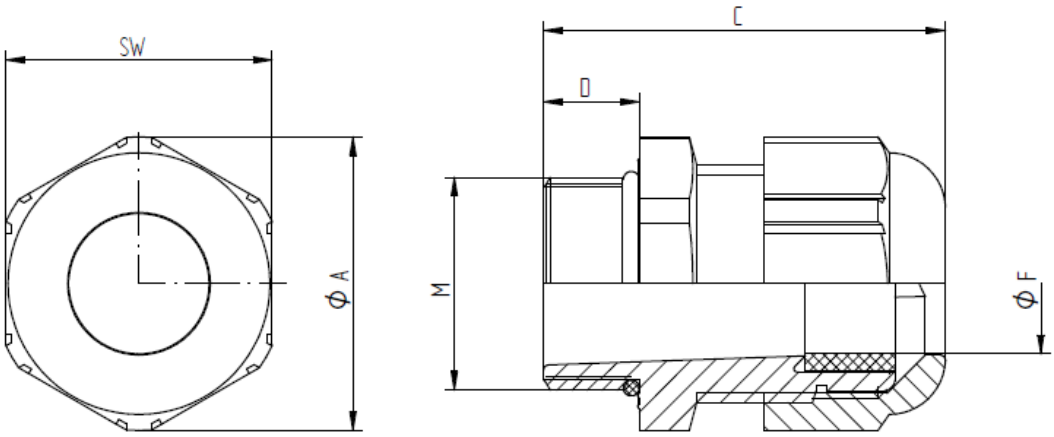

M	SW [mm]	Ø A [mm]	C [mm]	D [mm]	Ø F [mm] Clamping range	O-Ring [mm]	Article No.
M12x1,5	15	16,6	30	8	4–5,5	9x1,5	53111407
M16x1,5	19	21,1	34	8	4,5–9	13x1,5	53111417
M20x1,5	25	27,6	37	9	7–13	17x2	53111427
M25x1,5	30	33,6	40	10	9–17	22x2	53111437
M32x1,5	36	40,3	47	10	11–21	28x2	53111447
M40x1,5	46	51,6	52	10	19–28	36x2	53111457
M50X1,5	55	61,6	62	12	27–35	46x2	53111467
M63x1,5	66	73,9	71	12	34–45	57x2	53111477

MAST1 / 15.12.2016 / freigegeben