E11742

Connecting cable with socket

ADOGK190MSS0005H19

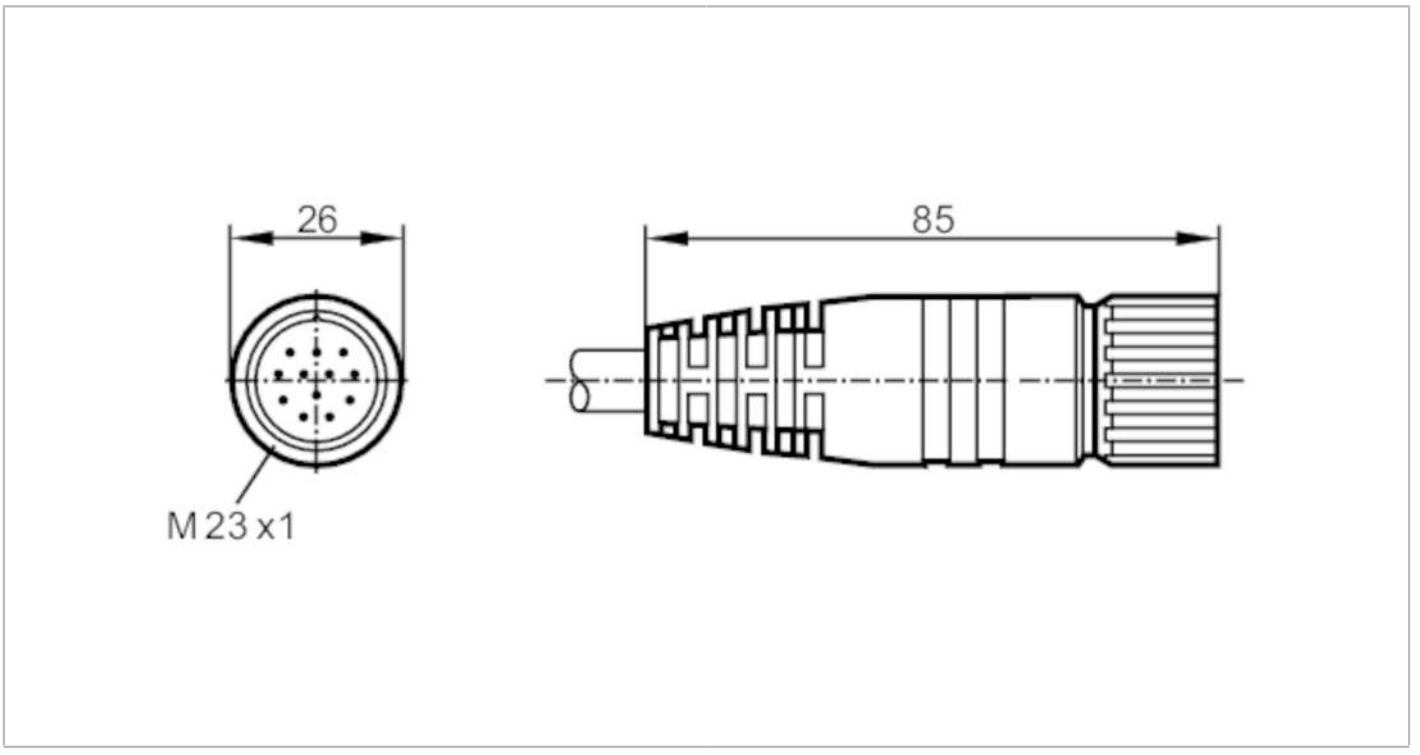

Application		
Special feature		Halogen-free
Electrical data		
Operating voltage	[V]	< 63 AC/DC
Max. current load total	[A]	8
Operating conditions		
Ambient temperature	[°C]	-25...80
Protection		IP 67
Mechanical data		
Weight	[g]	1141
Dimensions	[mm]	26 x 26 x 85
Materials		PUR black
Moulded-body material		PUR
Material nut		brass, nickel-plated
Tightening torque	[Nm]	2
Remarks		
Pack quantity		1 pcs.

E11742

Connecting cable with socket

ADOGK190MSS0005H19

Electrical connection

Cable: 5 m, PUR, Halogen-free, black, Ø 11.6 mm; 16 x 0.5 mm² (63 x Ø 0.1 mm) + 3 x 1.0 mm² (127 x Ø 0.1 mm)

Electrical connection - socket

Connector: 1 x M23, straight; Moulded body: PUR; Locking: brass, nickel-plated

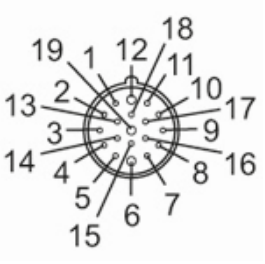

E11742

Connecting cable with socket

ADOGK190MSS0005H19

Connection

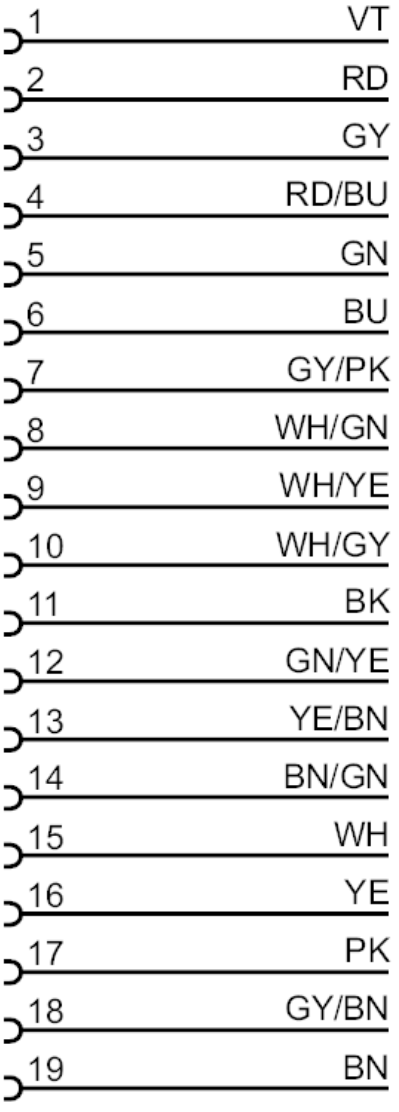

Core colours :

BK =	black
BN =	brown
BU =	blue
GN =	green
GY =	grey
PK =	pink
RD =	red
VT =	lilac
WH =	white
YE =	yellow