# Series CH01

**0821201006**



- Qn = [[38] l/min] ... [[2800] l/min]

## AVENTICS Series CH01 Throttle valves

Series CH throttle valves can be used for nominal flows up to 2,800 l/min. The Series features special versions with integrated silencer and screw-in variants.




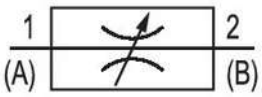


## Technical data

| | |
|---|---|
| Industry | Industrial |
| Min. working pressure | 0 bar |
| Max. working pressure | 10 bar |
| Min. ambient temperature | 0 °C |
| Max. ambient temperature | 80 °C |
| Min. medium temperature | 0 °C |
| Max. medium temperature | 80 °C |
| Port 1 | G 1/2 |
| Port 2 | G 1/2 |
| Medium | Compressed air |
| Compressed air connection type 2 | Internal thread |
| Compressed air connection type | Internal thread |
| Throttle bore Ø | 8.5 mm |
| Flow Qn | 2800 l/min |
| Weight | 0.17 kg |
| Housing material | Aluminum |
| Surface housing | anodized |
| Seal material | Acrylonitrile butadiene rubber |
| Material flow control screw | Steel, chrome-plated |

| | |
|---|---|
| Surface flow control screw | galvanized |
| Part No. | 0821201006 |

## Technical information

The min. control pressure must be adhered to, since otherwise faulty switching and valve failure may result!

The pressure dew point must be at least 15 °C less than ambient and medium temperature and may not exceed 3 °C.

The oil content of compressed air must remain constant during the life cycle.

Use only the approved oils from AVENTICS. Further information can be found in the “Technical information” document (available in https://www.emerson.com/en-us/support).

## Dimensions

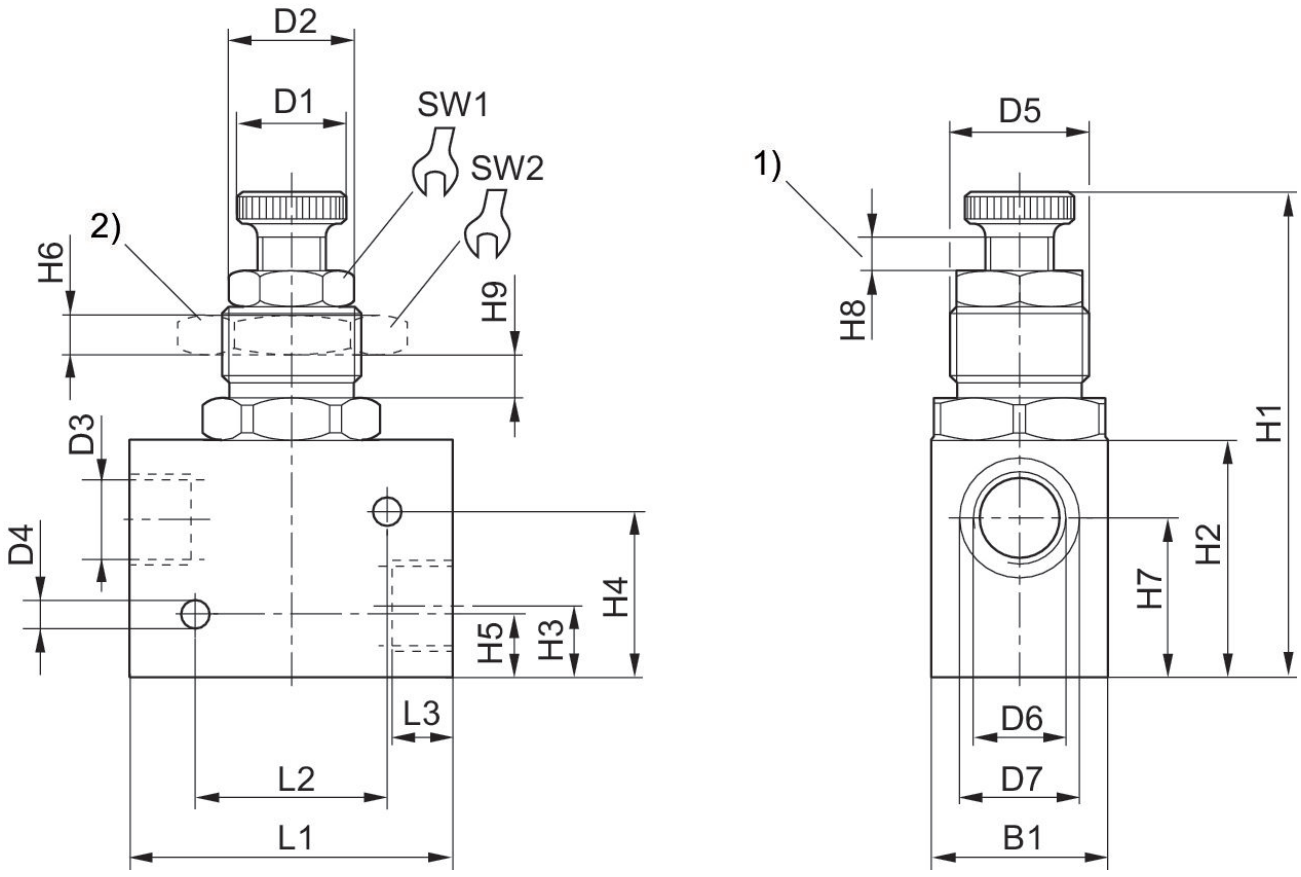


1) throttle setting range 2) nut for control panel installation

| Part No. | Port G | D1 | D2 | D3 | D4 | D5 | D6 | D7 | B1 |
|---|---|---|---|---|---|---|---|---|---|
| 0821201006 | G 1/2 | 27 | 27,5 | 19 | 6,5 | M32x1,5 | G1/2 | 27 | 40 |

| Part No. | H1 | H2 | H3 | H4 | H5 | H6 | H7 | H8 | H9 |
|---|---|---|---|---|---|---|---|---|---|
| 0821201006 | 120 | 50 | 17 | 40.5 | 15.5 | 9 | 38 | 8 | 9 |

| Part No. | L1 | L2 | L3 | SW1 | SW2 |
|---|---|---|---|---|---|
| 0821201006 | 75.3 | 45 | 14 | 24 | 46 |