

Image may differ from product. See technical specification for details.

# 6309-2Z/VA208

## Deep groove ball bearing for high temperature applications with shields on both sides

Single row deep groove ball bearings for high temperature applications, with shields on both sides, are designed for challenging operating conditions, with certain variants being capable of performing at temperatures as high as 350 °C (660 °F). They have larger radial internal clearances and use graphite-based lubricants that enable operation at high

temperatures. They are lubricated for the life of the bearing and the entire surface of the bearings and shields are manganese phosphate treated, which enhances adhesion of the lubricant to the metal and improves their running-in properties. As with deep groove ball bearings generally, they are particularly versatile, accommodate radial and axial loads in both directions, and are easy to mount.

- Optimized for operation at high temperatures – up to 350 °C (660 °F)
- Easily swapped with grease-lubricated bearings of corresponding ISO dimensions
- Increased reliability, reduced complexity and decreased environmental impact
- Integral sealing prolongs bearing service life
- Typical benefits of single row deep groove ball bearings

# Overview

## Dimensions

| | |
|---|---|
| Bore diameter | 45 mm |
| Outside diameter | 100 mm |
| Width | 25 mm |

## Performance

| | |
|---|---|
| Basic static load rating | 31.5 kN |
| Limiting speed | 60 r/min |
| Maximum operating temperature | 350 °C |

## Properties

| | |
|---|---|
| Filling slots | Without |
| Number of rows | 1 |
| Locating feature, bearing outer ring | None |
| Bore type | Cylindrical |
| Cage | Non-metallic |
| Matched arrangement | No |
| Radial internal clearance | Multiples of C5 |
| Material, bearing | High temperature steel |
| Coating | Coated |
| Sealing | Shield on both sides |
| Sealing type | Non-contact |
| Lubricant | Solid lubricant |
| Relubrication feature | Without |

## Logistics

| | |
|---|---|
| Product net weight | 0.814 kg |
| eClass code | 23-05-90-90 |
| UNSPSC code | 31171504 |

# Technical specification

| | |
|---|---|
| Running in required | No |

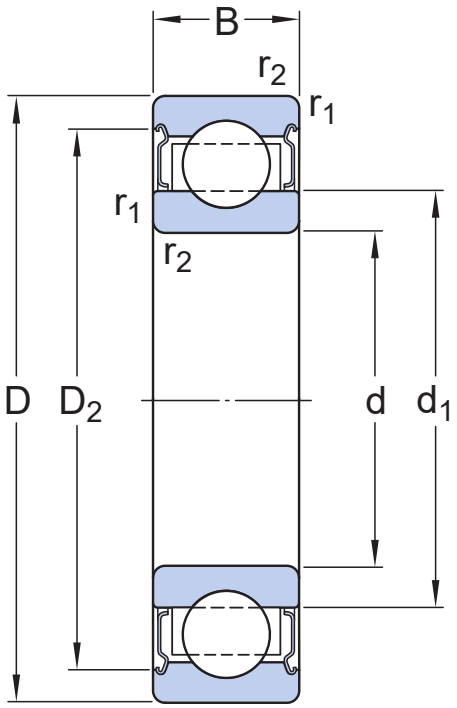


## Dimensions

| | | |
|---|---|---|
| d | 45 mm | Bore diameter |
| D | 100 mm | Outside diameter |
| B | 25 mm | Width |
| $d_1$ | ≈ 62.18 mm | Shoulder diameter inner ring |
| $D_2$ | ≈ 86.7 mm | Recess diameter outer ring shoulder |
| $r_{1,2}$ | min. 1.5 mm | Chamfer dimension |

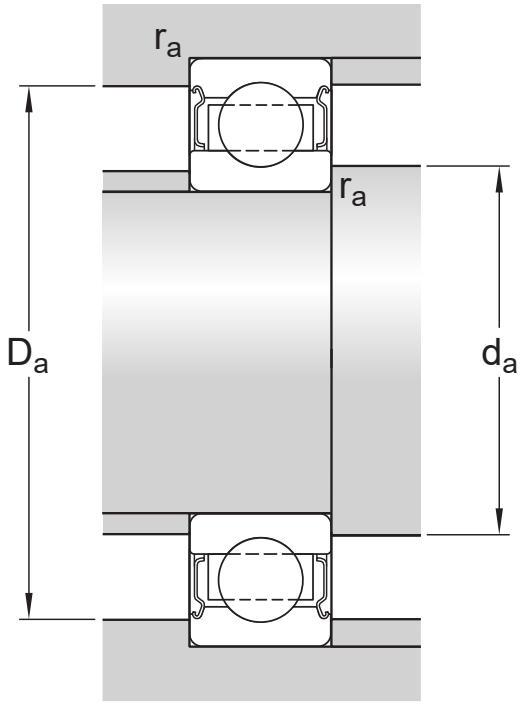


## Abutment dimensions

| | | |
|---|---|---|
| $d_a$ | min. 54 mm | Abutment diameter shaft |
| $d_a$ | max. 62.1 mm | Abutment diameter shaft |
| $D_a$ | max. 91 mm | Abutment diameter housing |
| $r_a$ | max. 1.5 mm | Fillet radius |

## Calculation data

| | | |
|---|---|---|
| Basic static load rating | $C_0$ | 31.5 kN |
| Limiting speed | | 60 r/min |
| Operating temperature | T | max. 350 °C |

## Tolerances and clearances

### GENERAL BEARING SPECIFICATIONS

- Tolerances: Normal (metric), P6, P5, Normal (inch)
- Radial internal clearance: Classes C2 to C5

## BEARING INTERFACES

- Seat tolerances for standard conditions
- Tolerances and resultant fits

## More Information

### Product details

- Single row deep groove ball bearings
- Stainless steel deep groove ball bearings
- Single row deep groove ball bearings with filling slots
- Double row deep groove ball bearings
- General bearing specifications
- Loads
- Temperature limits
- Permissible speed
- Designation system

### Engineering information

- Principles of rolling bearing selection
- General bearing knowledge
- Bearing selection process
- Bearing interfaces
- Seat tolerances for standard conditions
- Selecting internal clearance
- Lubrication
- Sealing, mounting and dismounting
- Bearing failure and how to prevent it

### Tools

- SKF Product select
- SimPro Quick
- Bearing Frequency Calculator
- LubeSelect for SKF greases
- Heater selection tool

# Terms of use

By accessing and using this website / app owned and published by AB SKF (publ.) (556007-3495 · Gothenburg) (“SKF”), you agree to the following terms and conditions:

### Warranty Disclaimer and Limitation of Liability

Although every care has been taken to assure the accuracy of the information on this website / app, SKF provides this information "AS IS" and DISCLAIMS ALL WARRANTIES, EXPRESS OR IMPLIED, INCLUDING, BUT NOT LIMITED TO, IMPLIED WARRANTIES OF MERCHANTABILITY AND FITNESS FOR A PARTICULAR PURPOSE. You acknowledge that your use of this website / app is at your sole risk, that you assume full responsibility for all costs associated with use of this website / app, and that SKF shall not be liable for any direct, incidental, consequential, or indirect damages of any kind arising out of your access to, or use of the information or software made available on this website / app.

Any warranties and representations in this website / app for SKF products or services that you purchase or use will be subject to the agreed upon terms and conditions in the contract for such product or service.

Further, for non-SKF websites / apps that are referenced in our website / app or where a hyperlink appears, SKF makes no warranties concerning the accuracy or reliability of the information in these websites / apps and assumes no responsibility for material created or published by third parties contained therein. In addition, SKF does not warrant that this website / app or these other linked websites / apps are free from viruses or other harmful elements.

### Third Party Services

When viewing YouTube content via the SKF website(s) (i.e. using YouTube API Services), you agree to be bound by the YouTube Terms of Service.

### Copyright

Copyright in this website / app copyright of the information and software made available on this website / app rest with SKF or its licensors. All rights are reserved. All licensed material will reference the licensor that has granted SKF the right to use the material. The information and software made available on this website / app may not be reproduced, duplicated, copied, transferred, distributed, stored, modified, downloaded or otherwise exploited for any commercial use without the prior written approval of SKF. However, it may be reproduced, stored and downloaded for use by individuals without prior written approval of SKF. Under no circumstances may this information or software be supplied to third parties.

This website /app includes certain images used under license from Shutterstock, Inc.

### Trademarks and Patents

All trademarks, brand names, and corporate logos displayed on the website / app are the property of SKF or its licensors, and may not be used in any way without prior written approval by SKF. All licensed trademarks published on this website / app reference the licensor that has granted SKF the right to use the trademark. Access to this website / app does not grant to the user any license under any patents owned by or licensed to SKF.

### Changes

SKF reserves the right to make changes or additions to this website / app at any time.