G2JM5AL20

Manufacturer data sheet: V1.076

Monitoring relay - 3-phase current monitoring

Status: Available Data sheet created: 01.07.2025

Item Number: 2390800 - **Serie:** Gamma - **EAN:** 9008662002937



- Monitoring relays GAMMA series
- Current monitoring three-phase
- Multifunction
- measuring range 3x 5A
- Fault memory
- Supply voltage selectable via power module TR2/SNT2
- 2 changeover contacts
- width 22,5mm
- industrial design

Description

3-phase current monitoring with adjustable thresholds, timing for start-up suppression and tripping delay separately adjustable.

General information

Short description	Current monitoring 3-phase, 5A, multifunction, 2 changeover contacts
Item Number	2390800
EAN	9008662002937
Main category	Monitoring Relays
Series	Gamma
Type	G2JM5AL20
Design	Industrial design
Supply	12-400V AC
Dimensions	22.5 x 90 x 108 mm

Functions and measurands

Amount of functions 4

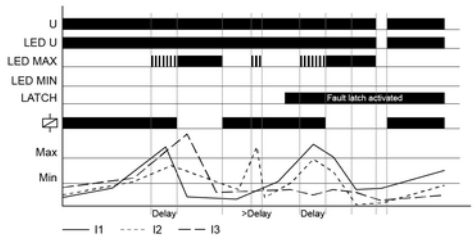

Overcurrent monitoring (OVER, OVER+LATCH)

When the measured current of one of the phases exceeds the value adjusted at the MAX-regulator, the set interval of the tripping delay (DELAY) begins (red LED MAX flashes). After the interval has expired (red LED MAX illuminated), the output relays switch into off-position (yellow LED not illuminated). The output relays again switch into on-position (yellow LED illuminated), when the measured current of all the phases falls below the value adjusted at the MIN-regulator (red LED MAX not illuminated). If the fault latch is activated (OVER+LATCH) and the measured current of one of the phases remains above the MAXvalue longer than the set interval of the tripping delay, the output relays remain in the off-position even if the measured current of all the phases falls below the value adjusted at the MIN-regulator. After resetting the failure (interrupting and re-applying the supply voltage), the output relays switch into on-position and a new measuring cycle begins with the set interval of the start-up suppression (START).

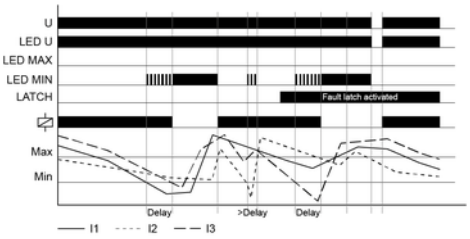

Undercurrent monitoring (UNDER, UNDER+LATCH)

When the measured current of one of the phases falls below the value adjusted at the MIN-regulator, the set interval of the tripping delay (DELAY) begins (red LED MIN flashes). After the interval has expired (red LED MIN illuminated), the output relays switch into off-position (yellow LED not illuminated). The output relays again switch into on-position (yellow LED illuminated), when the measured current of all the phases exceeds the value adjusted at the MAX-regulator. If the fault latch is activated (UNDER+LATCH) and the measured current of one of the phases remains below the MIN-value longer than the set interval of the tripping delay, the output relays remain in the off-position even if the measured current of all the phases exceeds the value adjusted at the MAX-regulator. After resetting the failure (interrupting and re-applying the supply voltage), the output relays switch into on-position and a new measuring cycle begins with the set interval of the start-up suppression (START).

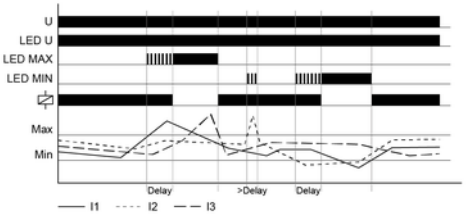

Window function (WIN)

The output relays switch into on-position (yellow LED illuminated) when the measured current of all the phases exceeds the value adjusted at the MIN-regulator. When the measured current of one of the phases exceeds the value adjusted at the MAX-regulator, the set interval of the tripping delay (DELAY) begins (red LED MAX flashes). After the interval has expired (red LED MAX illuminated), the output relays switch into offposition (yellow LED not illuminated). The output relays again switch into on-position (yellow LED illuminated) when the measured current of all the phases falls below the value adjusted at the MAX-regulator (red LED MAX not illuminated). When the measured current of one of the phases falls below the value adjusted at the MIN-regulator, the set interval of the tripping delay (DELAY) begins again (red LED MIN flashes). After the interval has expired (red LED MIN illuminated), the output relays switch into off-position (yellow LED not illuminated).

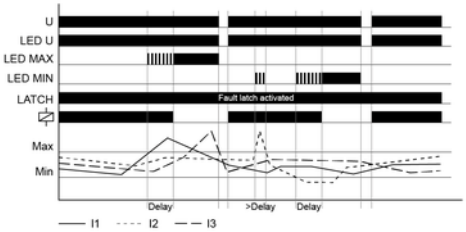

Window function (WIN+LATCH)

If the fault latch is activated (WIN+LATCH) and the measured current of one of the phases remains below the MIN-value longer than the set interval of the tripping delay, the output relays remain in the off-position even if the measured current of all the phases exceeds the value adjusted at the MIN-regulator. If the measured current of one of the phases remains above the MAX-value longer than the set interval of the tripping delay, the output relays remain in the off-position even if the measured current of all the phases falls below the value adjusted at the MAX-regulator. After resetting the failure (interrupting and re-applying the supply voltage), the output relays switch into on-position and a new measuring cycle begins with the set interval of the start-up suppression (START).

Time ranges

Number Of Areas	2	
Time ranges	**Setting range**	
	Start-up delay	0 ... 10s
	Shutter delay	0.1 ... 10s

Indicators

Supply/time lapse 1	Green LED U ON: Supply voltage applied
Supply/time lapse 2	Green LED flashes: Start-up suppression display
Relay state	Yellow LED ON/OFF: output relay position
Error / monitoring function	Red LED ON/OFF: Display error for corresponding threshold
Error / monitoring function	Red LED flashes: Indication of tripping delay for corresponding threshold

Mechanical design

Housing material	made of self-extinguishing plastic
Housing - protection degree	IP40
Mounting	top hat rail TH 35 7,5-15 according to IEC 60715:2017 / EN 60715:2017
Terminals/connections	Touch-proof clamping yoke terminals according to DGUV 3 (Screwdriver PZ1 required)
Terminals - protection degree	IP20
Mounting position	any
Stripping length	7 mm
Max. Tightening Torque	1 Nm
Terminal capacity	• 1 x 0.5 to 2.5mm² with/without ferrule • 1 x 4mm² without ferrule • 2 x 0.5 to 1.5mm² with/without ferrules • 2 x 2.5mm² flexible without ferrules

Supply circuit

Terminals/connections	A1-A2 (galvanically separated)
Supply voltage a.c.	12 ... 400 V
Supply voltage tolerance a.c.	According to power supply unit specification
Rated consumption a.c.	1,5 W / 2 VA
Rated frequency power module	According to power supply unit specification
Duty cycle	100%
Recovery time	100 ms
Drop-out voltage	>30% the supply voltage
Overvoltage category	III (IEC 60664-1)
Rated surge voltage	4 kV
Rated impulse withstand voltage	400 V a.c.

Output curcuit

Type	Relay
Contact 1	1 change over contact
Terminals 1	15-16-18
Contacts 2	1 change over contact
Terminals/connections 2	25-26-28
Rated voltage	250 V a.c.
conditional short-circuit current	1 kA
Fuse Protection	5 A quick
Mechanical life	15 x 10^6 Switching cycles
Electrical life	100 x 10^3 Switching cycles (1000 VA)
Utilization categorie	AC 15
Switching frequency	max. 60/min at 100 VA resistive load
Switching frequency 2	max. 6/min at 1000 VA resistive load (IEC 60947-5-1)
Rated surge voltage	4 kV
Overvoltage category	III (IEC 60664-1)

Measuring circuit

Measurand	Current - three phase
Measuring range	5 A a.c. (distance >5 mm)
Terminals/connections	K-I1
Overload capacity	6 A a.c. permanent
Input resistance	10 m
Messbereich 2	5 A a.c. (distance >5mm)
Klemmen 2	K-I2
Überlastbarkeit 2	6 A a.c. permanent
Eingangswiderstand 2	10 m
Messbereich 3	5 A a.c. (distance >5 mm)
Klemmen 3	K-I3
Überlastbarkeit 3	6 A a.c. permanent
Eingangswiderstand 3	10 m
Switching threshold minimum	5% ... 95% of IN
Switching threshold maximum	10% ... 100% of IN
Switching threshold asymmetrical	48 ... 63 Hz
Rated impulse withstand voltage	440 V a.c.
Rated surge voltage	4 kV
Overvoltage category	III (IEC 60664-1)

Accuracy

Base accuracy	≤3 % (from full scale)
Adjustment accuracy	≤5 % (from full scale)
Repetition accuracy	≤2 %
Temperature influence	≤0.05 % / °C
Frequency response	-10% ... +5% (16.6 ... 400 Hz)

Ambient conditions and general specifications

Ambient temperature IEC	-25 ... +55°C (IEC 60068-1)
Ambient temperature UL	-25 ... +40°C (UL 508)
Storage temperature	-25 ... +70 °C
Transport temperature	-25 ... +70 °C
Relative humidity	15% ... 85% (IEC 60721-3-3 class 3K3)
Vibration resistance	10 ... 55 Hz 0.35 mm (IEC 60068-2-6)
Shock resistance	15 g 11 ms (IEC 60068-2-27)
Pollution degree	3 (IEC 60664-1)
Installation altitude	Up to 2000 m above sea level

Logistics

Minimum Quantity	1
Tariff Number	85364900
EAN	9008662002937
Country of Origin	AT
Product Weight (g)	141

Available declarations / conformities

EAC	✓
CE	Open document
UL	Open document
c(UL)	Open document
REACH	Open document
WEEE	Open document
TSCA	Open document
RoHs	Open document
CMRT	Open document

CAD Files

STEP_G2_TRAFO_en.STEP	Download file

Media & drawings



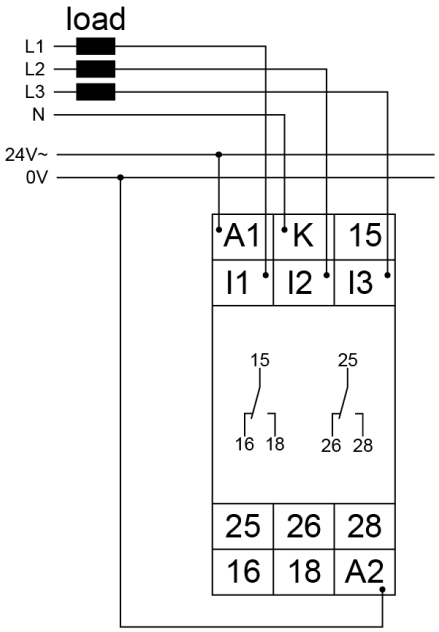

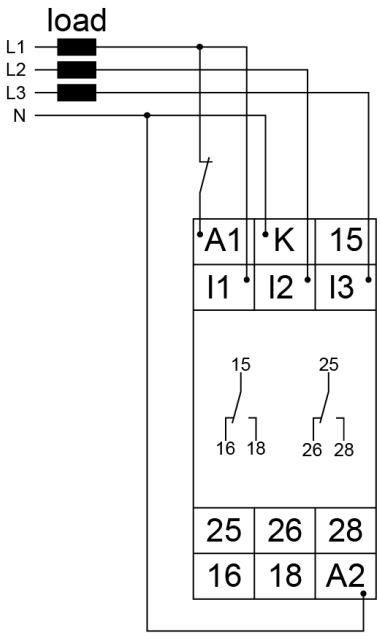

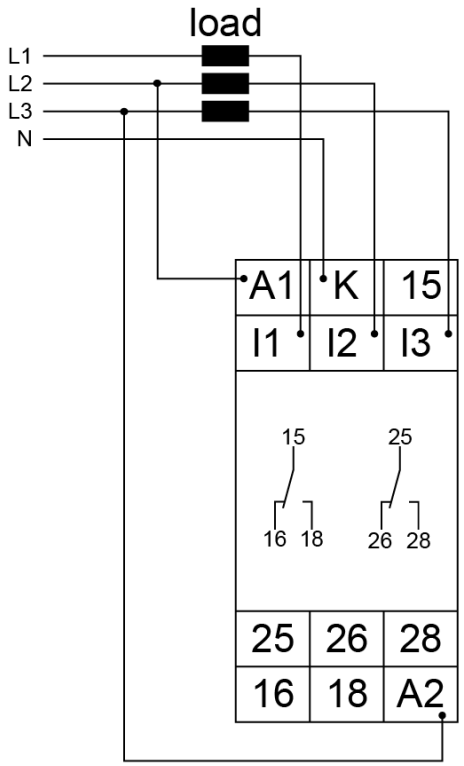
load
L1
L2
L3
N
A1
K
15
I1
I2
I3
15
25
16
18
26
28
25
26
28
16
18
A2

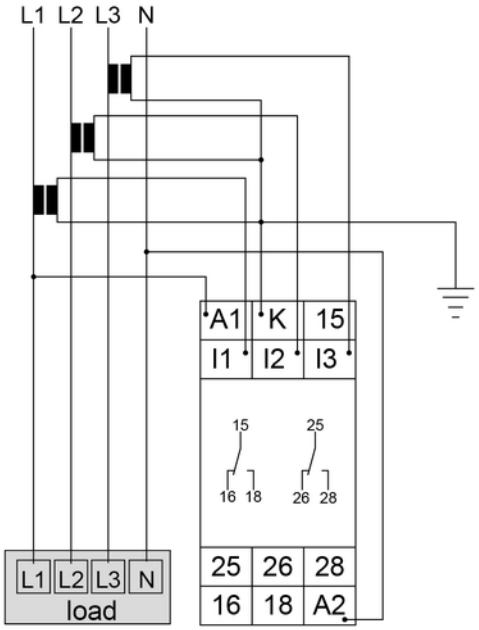
L1 L2 L3 N
A1
K
15
I1
I2
I3
15
25
16 18
26 28
L1
L2
L3
N
load
25
26
28
16
18
A2

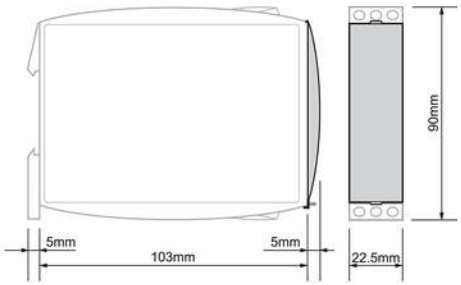
90mm
5mm
103mm
5mm
22.5mm

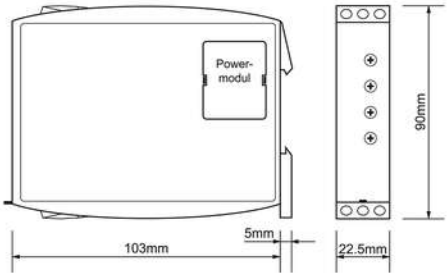
Power-
modul
90mm
5mm
103mm
22.5mm





Tele Haase Steuergeräte Ges.m.b.H
Vorarlberger Allee 38
1230 Vienna
Austria

CALL US +43 / 1 / 614 74 - 0
ONLINE SUPPORT support@tele-haase.at

Changes and errors excepted