Shut-off valve for pressure measuring instruments Model 910.11, brass, steel or stainless steel

Applications

- Shut-off and throttle valve for pressure measuring instruments, for measuring liquids, gases and vapours
- In stainless steel version for aggressive media, also in aggressive environments
- Process industry: Machine building, general plant construction, chemical/petrochemical, power plants, mining, on- and offshore and environmental technology

Special features

- Shut-off valve without test connection per DIN 16270 (with vent screw)
- Shut-off valve with test connection per DIN 16271 (with vent screw)
- Shut-off valve with separate isolating test connection per DIN 16272
- Nominal pressures to 400 bar



Shut-off valve per DIN 16270, LH-RH adjusting nut / male G ½, PN 250



Shut-off valve with separately isolated test connection per DIN 16272, LH/RH union/male G ½, with test pivot M20 x 1.5, PN 400

Description

Form A version of the shut-off valves is supplied with LH/RH union, and Form B version with shaft for the mounting bracket, with nipple and union nut. Shut-off valves with a test connection are intended for the simultaneous connection of operating pressure measuring instruments and test connection pressure gauges to the pressure pipeline. With shut-off valves per DIN 16271, the test pivot is sealed by a lens-type sealing ring and a screw cap placed on top; with valves per DIN 16272, the test pivot is separately isolated by an additional valve spindle. Shut-off valves are silicone-free.

Data sheets showing similar devices:
Stopcocks for lower pressures; model 910.10; see data sheet AC 09.01

WIKA
Part of your business

Standard version

Pressure connection
G ½, test connection M20 x 1.5

Wetted parts (valve body)
Brass:
PN 250, temperature range -10 ... +120 °C
Steel, phosphated:
PN 400, temperature range -10 ... +120 °C
Stainless steel:
PN 400, temperature range -20 ... +200 °C

Needle and seating
Corrosion and acid resistant stainless steel

Packing
PTFE

Hand wheel
Heat-resistant plastic

Nominal pressures
See table below

Options

- Free from oil and grease
- Acceptance test certificate per DIN 50049 / EN 10204 3.1
- DVGW version, PN 100, DIN 16270
- Connection M20 x 1.5, ½ NPT
- With bellows sealing up to PN 100
- Design per NACE

Versions for oxygen use

- With PN 100 bar to max. 60 °C
- With PN 160 bar to max. 60 °C
- With PN 250 bar to max. 60 °C
- With PN 230 bar to max. 200 °C (graphite packing)

With wetted parts from steel or stainless steel
- With special packing (pure graphite) up to 250 °C
- Up to PN 640 bar

Design	Connection	PN in bar	Wetted parts	Order number	
				Form A	Form B
DIN 16270 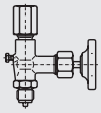	G ½	250	Brass	9090169	9095098
	G ½	400	Steel	9090177	9095101
	G ½	400	1.4571	9090967	9095110
DIN 16271 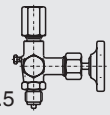 Test connection M20 x 1.5	G ½	250	Brass	9090975	9095128
	G ½	400	Steel	9090983	9095136
	G ½	400	1.4571	9091157	9095144
DIN 16272 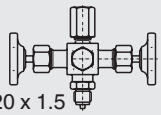 Test connection M20 x 1.5	G ½	250	Brass	9090991	9095152
	G ½	400	Steel	9091009	9095160
	G ½	400	1.4571	9091017	9095179

Adapter piece for valves with test connection

A suitable adapter piece is available for valves with test connection (test female G ½ / female M20 x 1.5).

Design	Material	Order number
Adapter piece 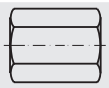 Test female G ½ / female M20 x 1.5	Brass	9091700
	1.4571	9091726

Dimensions in mm

Form A, LH/RH union / male

DIN 16270

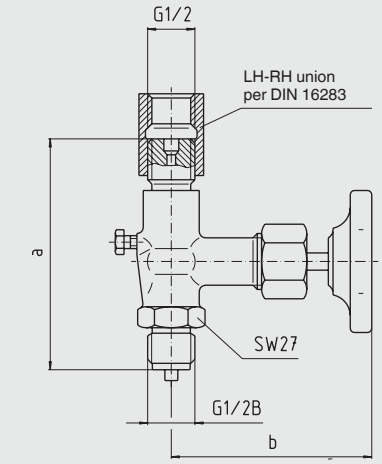

DIN 16271

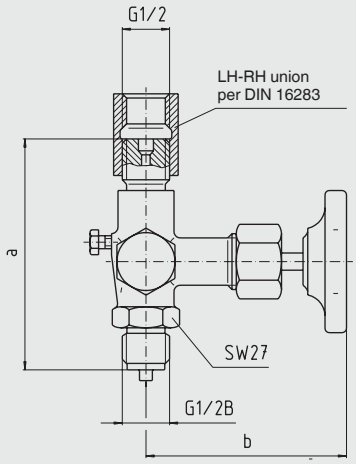

DIN 16272

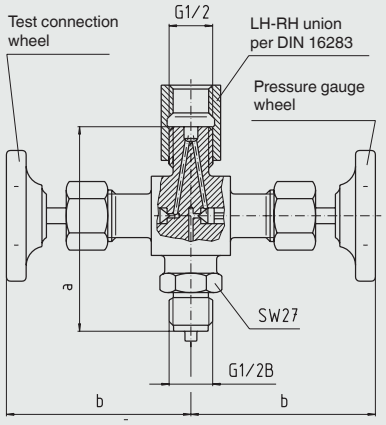

Form B, nipple and union nut / male, with shaft for mounting bracket

DIN 16270

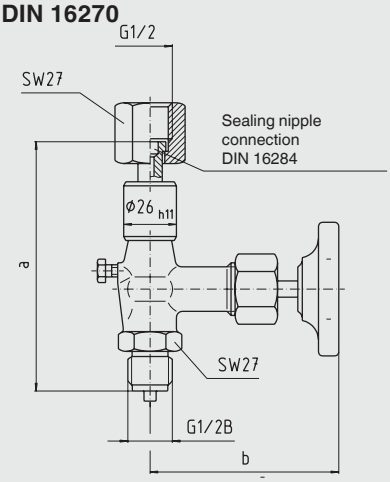

DIN 16271

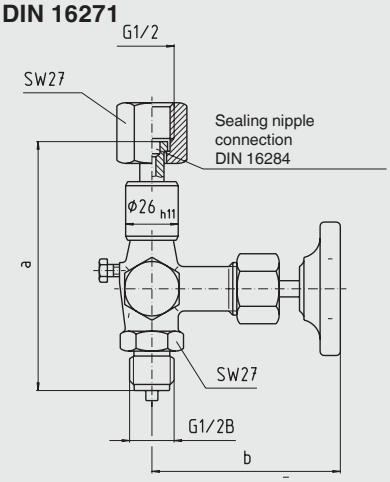

DIN 16272

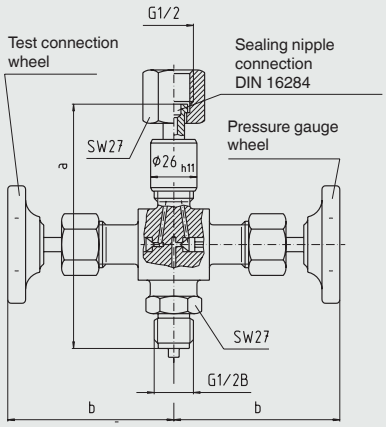

Design		Dimensions in mm		Weight in kg		
		a	b ±5	Brass	Steel	1.4571
DIN 16270 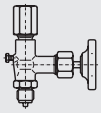	Form A	100 ±1	85	0.54	0.52	0.52
	Form B	120 ±5	85	0.61	0.56	0.56
DIN 16271 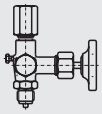	Form A	100 ±1	85	0.67	0.65	0.65
	Form B	120 ±5	85	0.79	0.74	0.74
DIN 16272 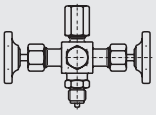	Form A	100 ±1	85	0.95	0.95	0.95
	Form B	120 ±5	85	1.00	1.00	1.00

Ordering information

To order, the 7-digit order number is sufficient. Other options require additional specification.

© 03/2003 WIKA Alexander Wiegand SE & Co. KG, all rights reserved
The specifications given in this document represent the state of engineering at the time of publishing.
We reserve the right to make modifications to the specifications and materials.

WIKA Alexander Wiegand SE & Co. KG
Alexander-Wiegand-Straße 30
63911 Klingenberg/Germany
Tel. +49 9372 132-0
Fax +49 9372 132-406
info@wika.de
www.wika.de

02/2017 EN