trumeter
innovation by design

Now available
LEFT-HAND
and
RIGHT-HAND
drive shaft

3602 / 3603 / 3604 Series

Mechanical Totalizing Counter



3602 dual shaft



3603 left-hand shaft



3604 right-hand shaft

This unit counts revolutions on many different types of production machinery. Robustly constructed for continuous operation at high speeds with the main shaft running in double oil impregnated bearings to ensure accurate, long term, trouble free service. It is supplied with a double or single drive with wing bushing and customer configurable left or right side reset.

Key Features

- 6-digit 6.4mm (0.25in) readout
- Up to 3000 counts per minute with 1:1 gear ratio
- 1:1, 1:10, 2:1, 3:1, 4:1 gearings as standard
- Front viewing
- Reset to zero
- Reset by lever
- Customer configurable reset position - either left or right
- Dual, left-hand or right-hand shaft options

Reset Instructions

Do not reset **while counter is running**
Do not use an **external device** to reset counter
Do not use **excessive force** to reset counter
Make sure that all of the 0's on the display are **lined up**



Specifications

Display	White on black, decimals black on white 6.4mm (0.25in) figures
Base Material	Black PC-ABS plastic
Cover Material	Grey ABS plastic
Drive Shaft Diameter	7mm (0.275 inch) diameter
Gearing	1:1, 1:10, 2:1, 3:1, 4:1 as standard. Others on application
Bearings	Bronze, oil impregnated for life
Operating Torque	180g.cm (2.5oz.in) at 1:1 gearing
Maximum Shaft Speed	3000 RPM
Maximum Count Speed	3000 CPM
Accuracy	+/- 1%
Operating Temp	-10°C to +50°C [14°F to 122°F]
Storage Temp	-20°C to +50°C [-4°F to 122°F]
Environmental Protection	IP40
Nett Weight	200g

trumeter
innovation by design

custom is our passion

Measuring Wheel Ordering Information

Material	Width	12” circumference	18” circumference	1/3m circumference	1/2m circumference
Rubber Covered Plastic	3/4" (19mm)	007571	007573	007905	007574
Knurled Aluminum	3/4" (19mm)	001558	001622		

Dimensions

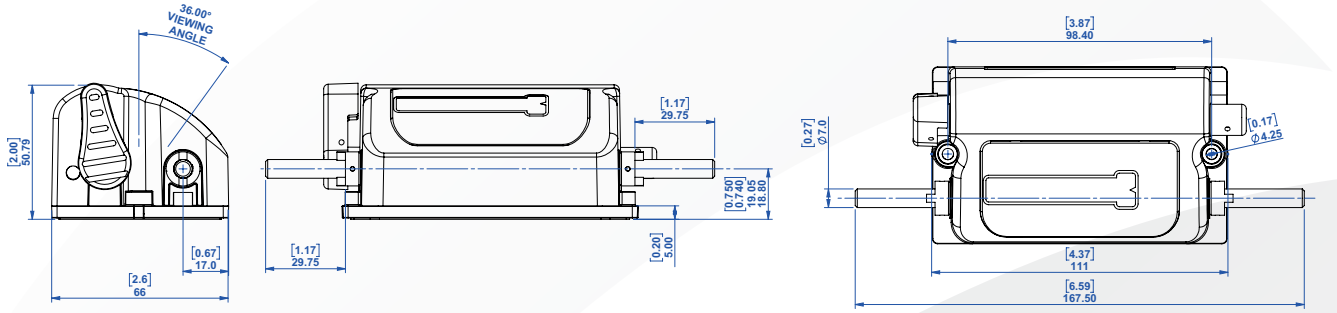

Part Number Ordering Chart

COUNTER TYPE	NUMBER OF DECIMAL PLACES
3602- DUAL SHAFT	**0** NO DECIMAL PLACES
3603- LEFT-HAND SHAFT	**1** ONE DECIMAL PLACE
3604- RIGHT-HAND SHAFT	

ALL COUNTERS ARE 6 DIGIT, FRONT VIEWING

RESET POSITION IS CUSTOMER CONFIGURABLE - LEFT OR RIGHT

DRIVE SHAFT WITH WING BUSHINGS FITTED AS STANDARD

EXAMPLE OF CODING: 3602 - 117TG
3602 = DUAL SHAFT
1 = ONE DECIMAL PLACE
1 = 0-11” FIG WHEEL (FEET & INCHES)
7 = 2:3
TG = TOP GOING

3602-117TG = 99999 - 11 / 2:3 / TOP GOING

FIG WHEEL READING	GEAR RATIO
0 FULL FIGURES (PLAIN)	**0** 1:10
1 0 - 11” FIG WHEEL (FEET & INCHES)	**1** 1:1
2 0 - 9” FIG WHEEL (FEET & TENTHS)	**2** 2:1
3 0 - 9” FIG WHEEL (YARDS & TENTHS)	**3** 3:1
4 FULL FIGURES (FEET)	**4** 4:1
5 FULL FIGURES (YARDS)	**5** 1:25
6 FULL FIGURES (METRES)	**6** 10:1
7 0 - 7/8” FIG WHEEL (YARDS & EIGTHS)	**7** 2:3
	8 128:105
9 0 - 9cm FIG WHEEL WITH 100 LINES(M/cm)	**9** 64:105

DRIVE DIRECTION

TC TOP COMING

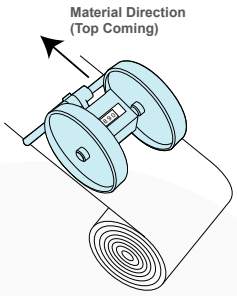

TG TOP GOING

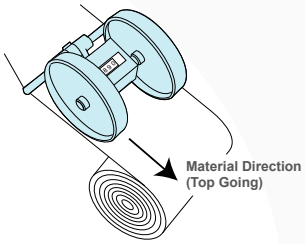



www.trumeter.com

Trumeter (The Americas)
6601 Lyons Rd, Suite H-7
Coconut Creek, Florida
FL 33073,
USA
Tel: +1 954 725 6699
Email: sales.usa@trumeter.com

Trumeter (Europe)
Pilot Mill
Alfred Street
Bury,
BL9 9JR
Tel: +44 161 674 0960
Email: sales.uk@trumeter.com

Innovative Design Technologies Sdn. Bhd
Lot 5881, Lorong Iks Bukit Minyak 1
Taman Perindustrian Iks, 14000 Bukit Tengah
Penang, Malaysia
Web: www.idtworld.com
Tel: + 604 5015700
Email: sales.my@idtworld.com