6001-2Z

SKF Explorer

Dimensions

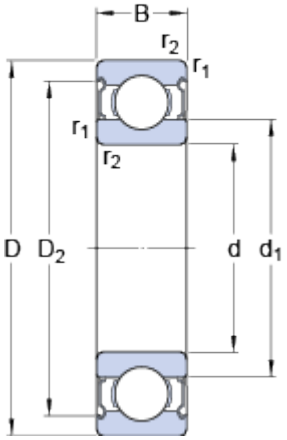

d		12	mm
D		28	mm
B		8	mm
d_1		17	mm
D_2		24.72	mm
$r_{1,2}$	min.	0.3	mm

Abutment dimensions

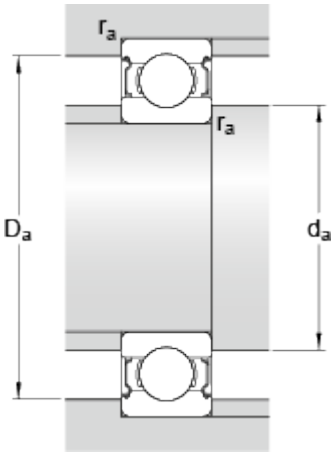

d_a	min.	14	mm
d_a	max.	16.9	mm
D_a	max.	26	mm
r_a	max.	0.3	mm

Calculation data

Basic dynamic load rating	C	5.4	kN
Basic static load rating	C_0	2.4	kN
Fatigue load limit	P_u	0.1	kN
Reference speed		60000	r/min
Limiting speed		30000	r/min
Calculation factor	k_r	0.025	
Calculation factor	f_0	13	

Mass

Mass bearing	0.0223	kg