BB
RANGE

brainboxes
www.brainboxes.com

BB-400 NeuronEdge

Smart Controller for Industry 4

- Smarter machine communication
- Unlock the data that matters
- Edge processing with Raspberry Pi
- Multiple ways to connect within compact DIN mount design
- Comes with easy to use interface
- Benefit from Linux and Raspbian open software



Think inside the box for Industry 4 Applications



- 8 Digital IO lines
- 1 Ethernet port for wider network
- 1 Ethernet port for device's own network
- Detachable Wi-Fi antenna
- Bluetooth
- UPS power management
- Dual redundant 5-30 VDC power supply
- Raspberry Pi Compute module

- Edge processing sends relevant data to your application or the cloud
- Highly compatible open source software
- Benefit from Linux and Raspbian development communities
- Customise with APIs and Docker containers
- Use REST, Websockets, or .NET APIs
- Program in your favourite language or use out-of-the-box applications

POWERED BY Raspberry Pi

ARDUINO AT HEART

{ REST }

docker

UK +44 (0)151 220 2500 // USA +1 855 958 2502 // JAPAN +81-3-3683-0509
www.brainboxes.com // sales@brainboxes.com

UK +44 (0)151 220 2500 // USA +1 855 958 2502 // JAPAN +81-3-3683-0509
www.brainboxes.com // sales@brainboxes.com

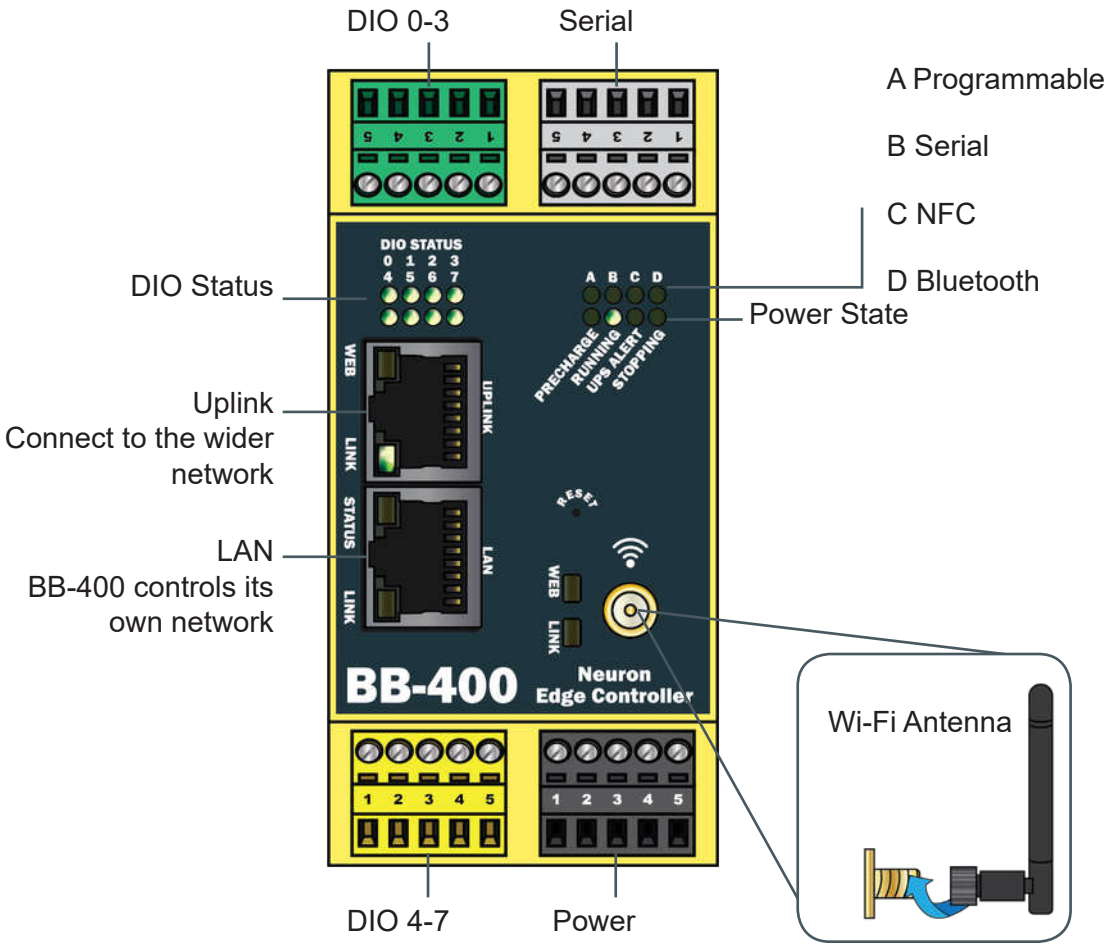

LED States	Solid Green	Flashing
Uplink Web	Has internet connection	Checking for internet connection
Uplink Link	Connected	Data
LAN Status	100 Mbps link	
LAN Link	Connected	Data
Wi-Fi Web	Has internet connection	Checking for internet connection
Wi-Fi Link	Connected	Scanning for Wi-Fi
Wi-Fi Web + Link	Connected to an access point	Scanning for an access point
DIO 1-8	User configurable on/off/flashing - default on when line high, off when line low	
A - Status	Logged in	Data
B - NFC	Available	Data
C - Serial Port	Open	Activity
D - Bluetooth	Available	Pairing/Data
Pre-charge	5 seconds - Full charge reached	Charging Backup supply
Running	Device is ready	OS booting/CPU activity
UPS Alert	External power loss detected - device using Backup power	Will enter stopping
Stopping	Power loss unresolved - clean shutdown initiated	3 Flashes when shutdown completed

UK +44 (0)151 220 2500 // USA +1 855 958 2502 // JAPAN +81-3-3683-0509
www.brainboxes.com // sales@brainboxes.com

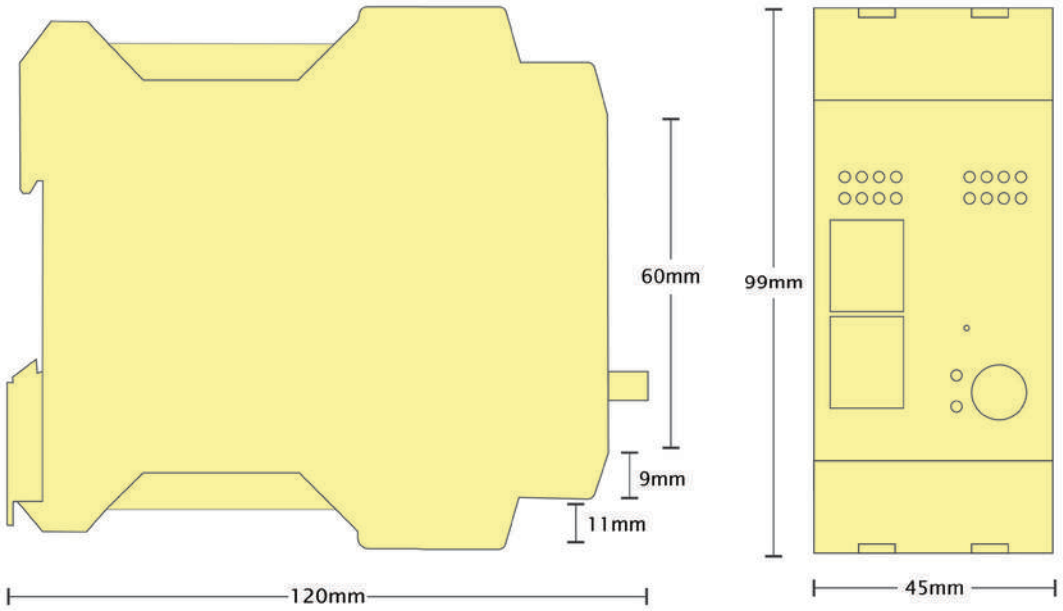

Terminal Block Pin Outs

Terminal Block	Pin 1	Pin 2	Pin 3	Pin 4	Pin 5
Green	-V	DIO 0	DIO 1	DIO 2	DIO 3
Yellow	-V	DIO 4	DIO 5	DIO 6	DIO 7
Grey - RS232	Sig GND	CTS	RxD	RTS	TxD
Grey - RS422/485 FD	Sig GND	RxD-	RxD+	TxD+	TxD-
Grey - RS485 HD	Sig GND			Data+	Data-
Black	-V	+V A	+V B	-V	Func GND
Power Input +5V to +30V DC 15W Max					

Ethernet Port Pin Outs

PIN	FUNCTION
1	RD+ / TD+
2	RD- / TD-
3	TD+ / RD+
4	NC
5	NC
6	TD- / RD-
7	NC
8	NC

Housing	IP-20 rated non-conducting polyamide case
Connectors	
Screw Terminals	3.5mm pitch
Wire Thickness Power Terminal	0.5 - 2.5 mm^2, #22 - #14 AWG
Wire Thickness	0.14 - 1.3 mm^2, #26 - #16 AWG
Environmental	
Operating Temperature	-20ºC to +70ºC/-4ºF to +158ºF
Storage Temperature	-40ºC to +80ºC/-40ºF to +176ºF
Ambient Relative Humidity	5 to 95% (non-condensing)

UK +44 (0)151 220 2500 // USA +1 855 958 2502 // JAPAN +81-3-3683-0509
www.brainboxes.com // sales@brainboxes.com

Power Supply	
Power Consumption	4 Watts typical, 15W Max
Power Supply input	+5V to +30Volts DC, Dual Power Inputs, reverse polarity protected
Max Input	35Volts
Isolation	1500VRMS Magnetic isolation from Ethernet
UPS	When power is interrupted a controlled shutdown is activated
	40 seconds mean time till shutdown under typical workload
Network Connectivity	
Ethernet Uplink Port	1x RJ45 jack, 10/100Mbps autosensing, crossover autosensing (Auto MDIX)
Ethernet LAN Port	1x RJ45 jack, 10/100Mbps autosensing, crossover autosensing (Auto MDIX)
Protection	1500V Magnetic Isolation between ports and network
Wi-Fi	802.11 b/g/n
	Detachable for use with extender cable
Bluetooth	v2.1 +EDR/ v3.0 +HS/ v4.0
Bluetooth Class	Class 2
Radio Frequency	2.45 GHz
Supported Bluetooth Profiles	SPP (Serial Port Profile)
NFC	Coming soon
Real Time Clock	Yes; with battery backup (battery not included)
Edge Processing	
Processor	Raspberry Pi Compute Module 3, 1.2GHz quad-core Broadcom BCM2837 processor
RAM	1 Gbyte LPDDR2 RAM
Storage	4 Gbytes eMMC Flash
Operating System	Raspbian Lite - based on Debian Linux
Security	Latest SSH and TLS security protocols
Administration	Secure Web administration with user definable roles
Docker Support	Pre-installed with web admin interface, Customised Containers available for NodeRed
Configurability	Full access to secure linux command line, open system, fully configurable, custom OS can be flashed into memory if required
Operating System Compatibility	
	Communicate with Device over TCP from any OS
	Suitable for any device with a Web Browser
	Raspberry Pi
	Android
	Linux

POWERED BY Raspberry Pi

Raspbian

Linux

UK +44 (0)151 220 2500 // USA +1 855 958 2502 // JAPAN +81-3-3683-0509
www.brainboxes.com // sales@brainboxes.com

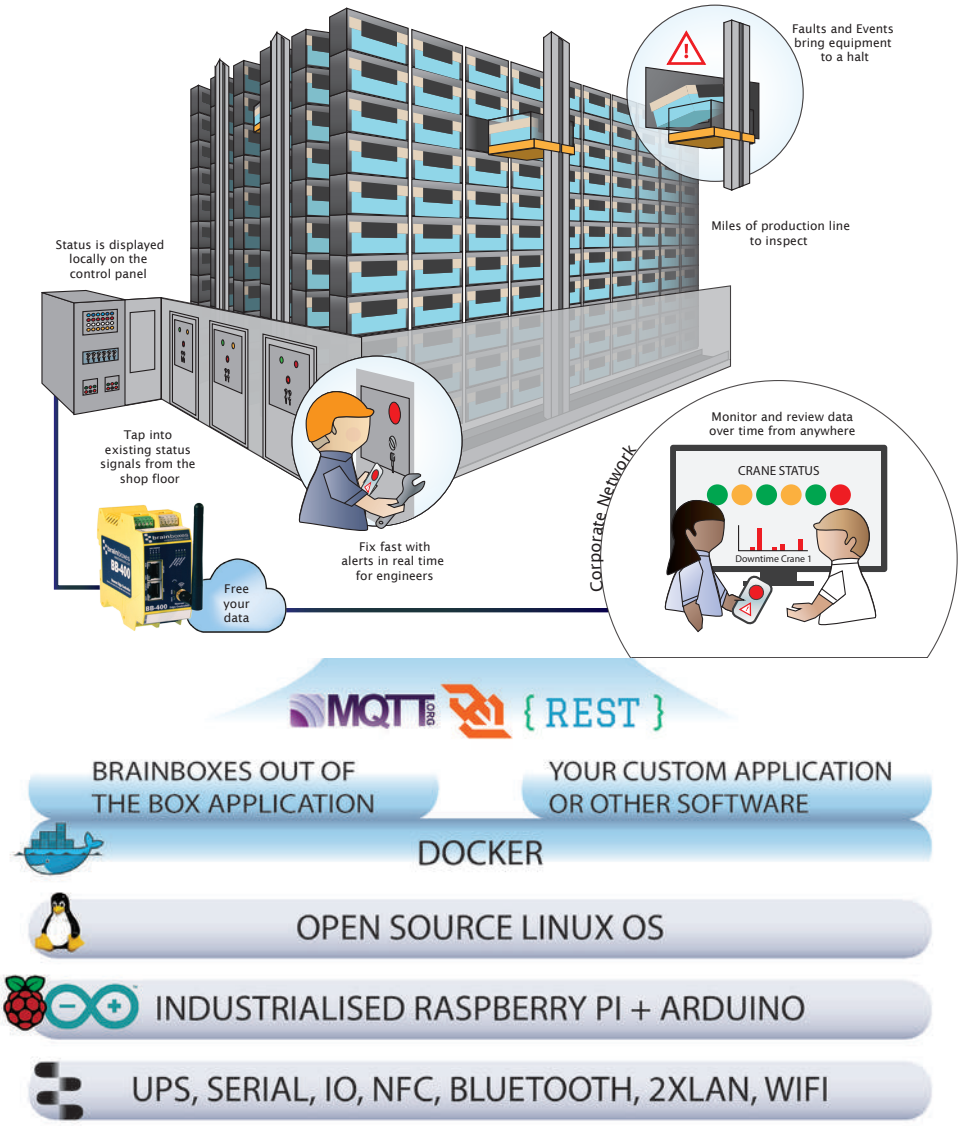

Device administration	
Administration interface	1. Secure web administration over port 9090 2. SSH using user name and passwords or SSH keys 3. USB mount the memory of the device over USB to a PC
Custom code	Multiple FAQs about writing and deploying code to the BB-400 are available on our website. Sample code is available in the following languages; .NET C#, Python, NodeJS, Node Red (visual coding interface). Code can be deployed either by locally using secure copy (SCP) or globally by creating a Docker container.
Docker	Is a global repository for Linux applications. Docker provides these applications in “containers” that can be downloaded through the web interface on the BB-400. Brainboxes provide a number of pre-built containers and Docker’s open source community allows you to use and contribute to even more. Each container runs like a mini virtual machine holding an application in isolation from its environment. Docker provides a good method for automatically updating containers on multiple devices in the field.

UK +44 (0)151 220 2500 // USA +1 855 958 2502 // JAPAN +81-3-3683-0509
www.brainboxes.com // sales@brainboxes.com

Digital Channels - 8 Ports individually selectable as Inputs or Outputs	
Inputs	User programmable counts positive or negative transitions up to 200Hz
NPN/PNP	Jumper selectable pull up for NPN, active low, type sensors and pull down for PNP, active high, type sensors
Logic Level 0:	-0V to +1V
Logic Level 1:	+2V to +30V
Latched Inputs:	Triggered by user programmable positive or negative edges, stays true until acknowledged
Outputs	Can be set to predetermined values on power on
Maximum output current	1 channel driven: Sinks up to 0.85 Amp max Max combined load 4 Amps per BB device
Characteristic:	Open drain output, protected MosFET intelligent short circuit protection up to 36V
Maximum output load Voltage	30V
ESD Production	16kV
IO processing	Arduino processing real time signals
IO Protocols	Modbus TCP or DCON ASCII (over TCP or Virtual COM port)

ARDUINO AT HEART™

The I/O lines run on an Arduino compatible microcontroller, giving you access to the vast library of Arduino I/O functionality.

IO protocols	
WebSocket, ASCII TCP, REST, ASCII over Serial	Allow communication with the BB-400 to get and set values of IO lines over the local network or from the device itself. This is different to protocols that send data up to the cloud.
WebSocket	1. Number of simultaneous connections 2. Throughput 3. Average response time
ASCII	1. Number of connections per second 2. Max number of commands per second 3. Average response time
REST	1. Number of connections per second 2. Max number of commands per second 3. Average response time
ASCII over Serial	1. Commands per second 2. Average response time
Cloud Connectivity	Brainboxes are developing support for the following cloud platforms…. Amazon webservices, Azure, Google cloud platform, IBM Watson Soon you will able to stream data to these services simply by entering your credentials. You have the option to write and deploy your own connection to the cloud platform of your choice.

UK +44 (0)151 220 2500 // USA +1 855 958 2502 // JAPAN +81-3-3683-0509
www.brainboxes.com // sales@brainboxes.com

Serial Port	
Ports	1x RS232, RS422/485 Full Duplex, or RS485 Half Duplex Software Selectable
Baud Rate	Any custom Baud rate between 60 - 921,600 Baud can be selected
Tx FIFO Size	128
Rx FIFO Size	128
Data Bits	5,6,7 or 8
Parity	Odd, Even, Mark, None
Stop Bits	1, 1.5 or 2
Flow Control	RTS/CTS, XON/XOFF
Operating Distance	RS422/485 Standard (4000 ft : 1200 metres) / EIA - RS232 Standard

sales@brainboxes.com

Packaging Information	
Packaging	Quick Start Guide
Device	BB-400
Packaged Weight	0.300 kg, 10.58 ounces
Packaged Dims	160x135x49 mm, 6.3x5.3x1.9 inches
GTIN Universal Code	837324004441
Approvals	
Industry Approvals	Microsoft Certified Gold Partner, WEEE, RoHS, AEO (C-TPAT), CE
Product Support	
Warranty	Lifetime - online registration required
Support	Lifetime Web, Email and Phone Support from fully qualified, friendly staff who work in and alongside the Product Development Team
Additional Information	
OEM option	Available for bulk buy OEM
Made In	Manufactured in the UK by Brainboxes Winner 2005 European Electronics Industry Awards 'Manufacturer of the Year'
Customisable	Brainboxes operate a 'Perfect Fit Custom Design' policy for volume users. More info:sales@brainboxes.com

GB AEOF 00031/11

brainboxes
www.brainboxes.com

sales@brainboxes.com
support@brainboxes.com
UK & EU: +44 (0)151 220 2500
USA Toll free: +1 855 958 2502

Brainboxes Limited

18 Hurricane Drive,
Liverpool International
Business Park, Speke,
Liverpool, Merseyside,
L24 8RL,
United Kingdom

Brainboxes LLC

4500 140th Avenue North
Suite 101,
Clearwater
FL 33762,
USA

Brainboxes Japan

8-26-5-506 Kameido,
Koto-ku,
Tokyo-to 136-0071,
Japan