LTN70MW024

WIRING MODULE Ø70MM. 12…24VDC



Product designation				Signal tower Ø70mm/2.75"
Product type designation				LTN70
General characteristics				
Diameter			mm - inch	70 / 2.75
Supply voltage (DC)			V	12...24
IEC degree of protection				IP65
Power consumption			VA	1
Mechanical features				
Terminals screw				Spring terminals
Conductor section				
	AWG/Kcmil			
		min		16
		max		24
	IEC			
		min	mm²	0.25
		max	mm²	1.5
Weight			g	170
Ambient conditions				
Temperature				
	Operating temperature			
		min	°C	-30
		max	°C	+50
Dimensions				

The characteristics described in this document are subject to updates or modifications at any time. The descriptions, technical and functional information, illustrations and instructions in this brochure are purely illustrative, and are consequently not contractually binding

LTN70MW024

WIRING MODULE Ø70MM. 12…24VDC

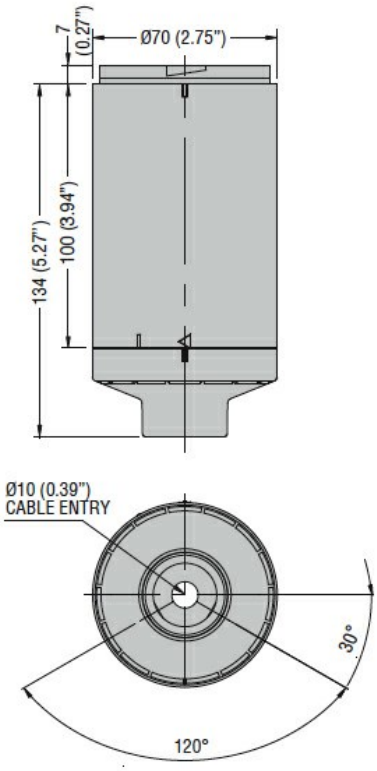

Wiring diagrams

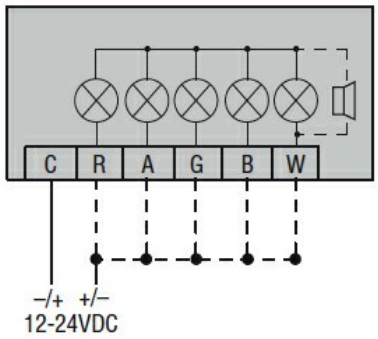

Certifications and compliance

Compliance

	CSA C22.2 n° 14
	IEC/EN/BS 60947-1
	IEC/EN/BS 60947-5-1
	UL508

Certificates

	cULus

ETIM classification

ETIM 8.0	EC001154 - Stand for signal tower without tube

The characteristics described in this document are subject to updates or modifications at any time. The descriptions, technical and functional information, illustrations and instructions in this brochure are purely illustrative, and are consequently not contractually binding