RM8001

Absolute multiturn encoder with solid shaft

RMS4096-S24/L2A

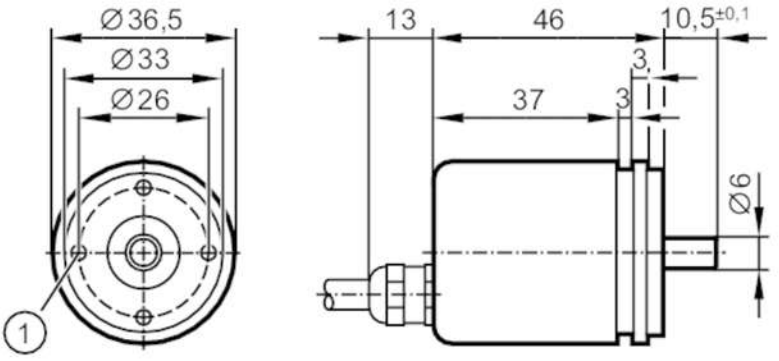

M3 Depth 6 mm

Product characteristics		
Resolution		4096 resolution; 8192 revolutions; 25 bit
Communication interface		SSI data interface
Shaft design		solid shaft
Shaft diameter	[mm]	6
Application		
Function principle		absolute
Revolution type		multiturn
Electrical data		
Operating voltage	[V]	4.5...30 DC
Current consumption	[mA]	< 30
Inputs		
Inputs		reversal of direction of rotation; reset to zero
Outputs		
Code		Gray code; (increasing code values when turned clockwise (seen on the shaft))
Code signal		Clock input; TTL-compatible signals; clock and clock (inv.) from drivers to RS 422; data output; synchronous serial; TTL-compatible signals, data, and data (inv.)
Measuring/setting range		
Resolution		4096 resolution; 8192 revolutions; 25 bit
Interfaces		
Communication interface		SSI data interface
Operating conditions		
Ambient temperature	[°C]	-40...85
Max. relative air humidity	[%]	98
Protection		IP 65
Tests / approvals		
Shock resistance		< 300 g (6 ms)
Vibration resistance		30 g (10...1000 Hz)
MTTF	[years]	350

RM8001

Absolute multiturn encoder with solid shaft

RMS4096-S24/L2A

Mechanical data		
Weight	[g]	323
Dimensions	[mm]	Ø 36.5 / L = 69.5
Materials		flange: aluminium; housing: steel powder-coated
Max. revolution, mechanical	[U/min]	12000
Max. starting torque	[Nm]	3
Reference temperature torque	[°C]	25
Shaft design		solid shaft
Shaft diameter	[mm]	6
Shaft material		steel
Max. shaft load axial (at the shaft end)	[N]	40
Max. shaft load radial (at the shaft end)	[N]	110
Fixing flange		Ø 36.5 mm

Remarks	
Remarks	Wires/pins not connected (n.c.) must not be used.

Electrical connection

Cable: 2 m, PUR; Maximum cable length: 100 m; axial

white	sensor 0 V
brown	sensor Ub
green	clock
yellow	clock (inv.)
grey	data
pink	data (inv.)
blue	reset to zero
red	reversal of direction of rotation
screen	housing

Diagrams and graphs

Pulse diagram

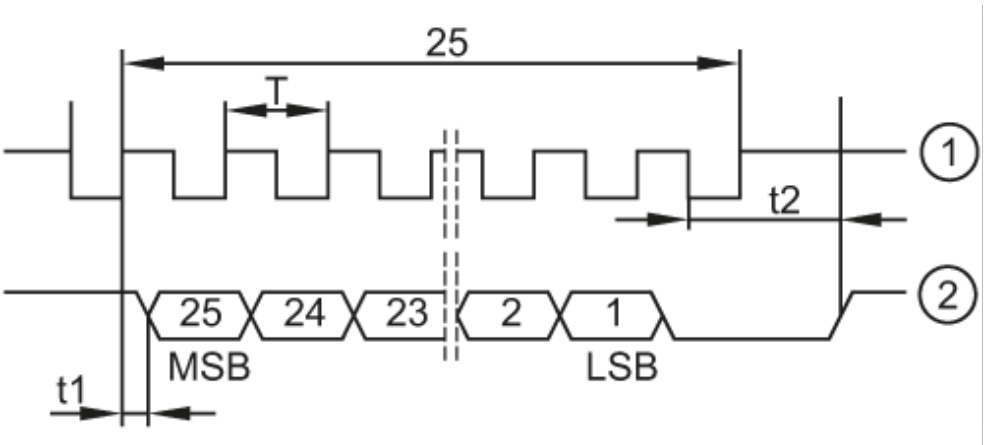

1 clock

2 data