TG SERIES

The TG series toggle guards are offered for 2 and 3-position switches with 15/32-32 threaded bushings and slotted or flat keyways. All models feature spring loaded covers that lock in either the open or closed positions. In the open position the switch actuator operates on all positions freely, in the closed position, the switch actuator is locked in the desired position.

The toggle guard is easily installed on the switch from the front panel with two mounting hex nuts and may be used with an optional panel seal provided with each switch.





Features:

- **MS approved & QPL'd choices**
- **Molded plastic cover - multiple color choices**
- **Bracket: Black painted steel**

TG-00001
MS25224-1

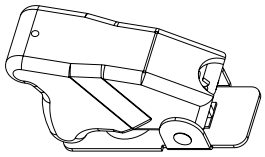

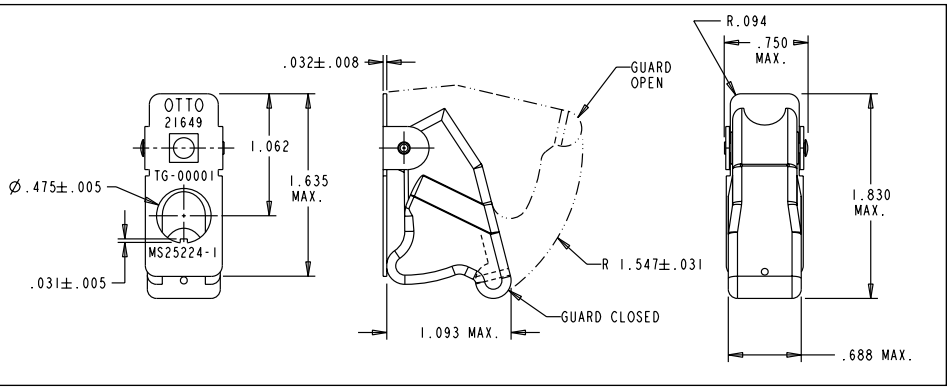

TG-00002
MS25224-3

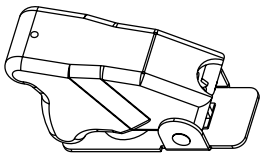

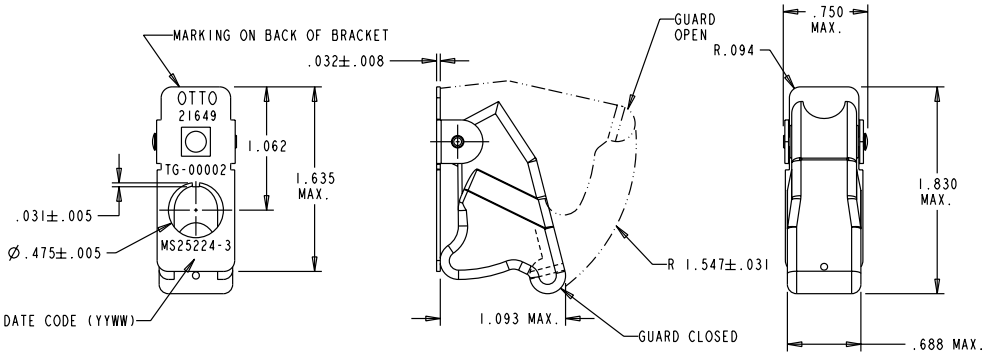

TG-00010

