Datasheet

MicroSD Card 3SE3 series

- SD 3.0 interface
- High performance
- Power fail Management
- ECC algorithm implement



Introduction

Innodisk MicroSD 3SE3 series, supporting class 10 with UHS-I (Except 8GB), are specifically designed for industrial PC and embedded applications. The 3.0 series SD card has latest firmware architecture and Flash algorithms, including superior wear leveling, and read disturb management ensuring highest reliability and endurance.

Innodisk MicroSD 3SE3 series provide wide range capacities from 4GB to 8GB with excellent quality SLC NAND Flash, and fully compliant to SD3.0, and SD2.0 specifications.

With its low power consumption and features above, Innodisk MicroSD 3SE3 series can be applied on industrial automation, SBC (single-board computer), medical equipment, infotainment, and mobile application.

MicroSD Card
3SE3 series

Contact us for more information about the MicroSD 3SE3 series.

Innodisk is a service-driven provider of industrial embedded flash storage products and technologies, with a focus on the cloud computing, industrial/embedded, and aerospace and defense industries.

Headquarters (Taiwan)

5F., No. 237, Sec. 1, Datong Rd., Xizhi Dist., New Taipei City 221, Taiwan
Tel: +886-2-77033000
Email: sales@innodisk.com

Branch Offices:

USA
usasales@innodisk.com
+1-510-770-9421
Europe
eusales@innodisk.com
+31-40-3045-400
Japan
jpsales@innodisk.com
+81-3-6667-0161
China
sales_cn@innodisk.com
+86-755-21673689
www.innodisk.com

© 2019 Innodisk Corporation. All right reserved. Specifications are subject to change without prior notice.

2019.1.18

Diagram

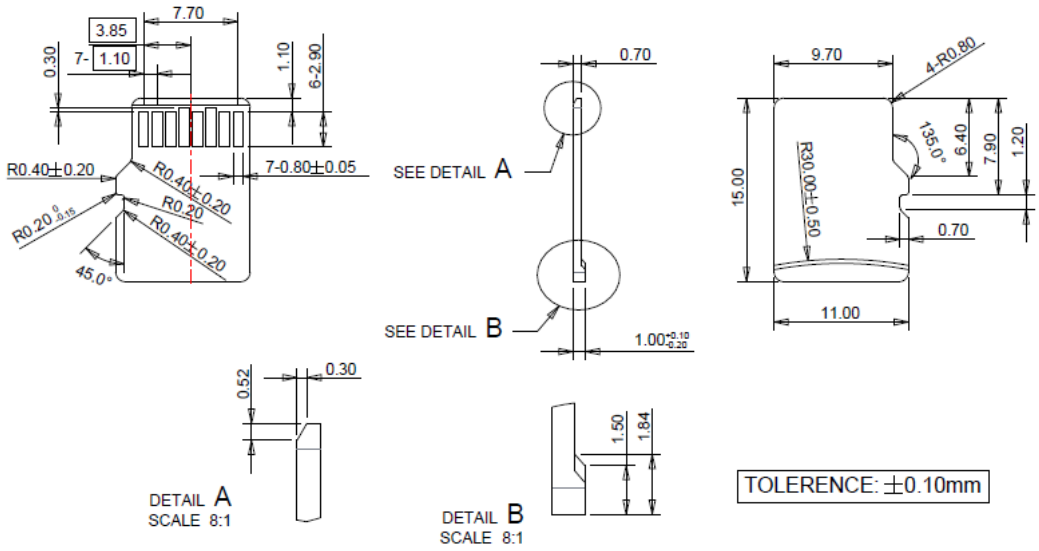

Specifications

Interface	SD 3.0
Flash Type	SLC
Capacity	4GB~8GB
Max. Channels	1
Sequential R/W (MB/sec, max.)	30/23
Max. Power Consumption	1.25 W (3.3V x 381mA)
Thermal Sensor	-
Extended DRAM buffer	-
H/W Write Protect	Y
ATA Security	-
S.M.A.R.T.	Y
Dimension (WxLxH)	11.0 X 15.0 X 1.0 mm
Environment	Vibration: 20G @7~2000Hz Shock: 1500G @ 0.5ms Storage Temperature: -25°C ~ +85°C MTBF: 3 million hours

Ordering Information

Operation Temp.	4GB	8GB
Extended Grade (-25°C ~ +85°C)	DESDM-04GS02AE1ST	DESDM-08GS02AE1ST
Wide Temp. Grade (-40°C ~ +85°C)	DESDM-04GS02AW1ST	DESDM-08GS02AW1ST