RM9001

Absolute multiturn encoder with solid shaft

RMS0024-C24UST

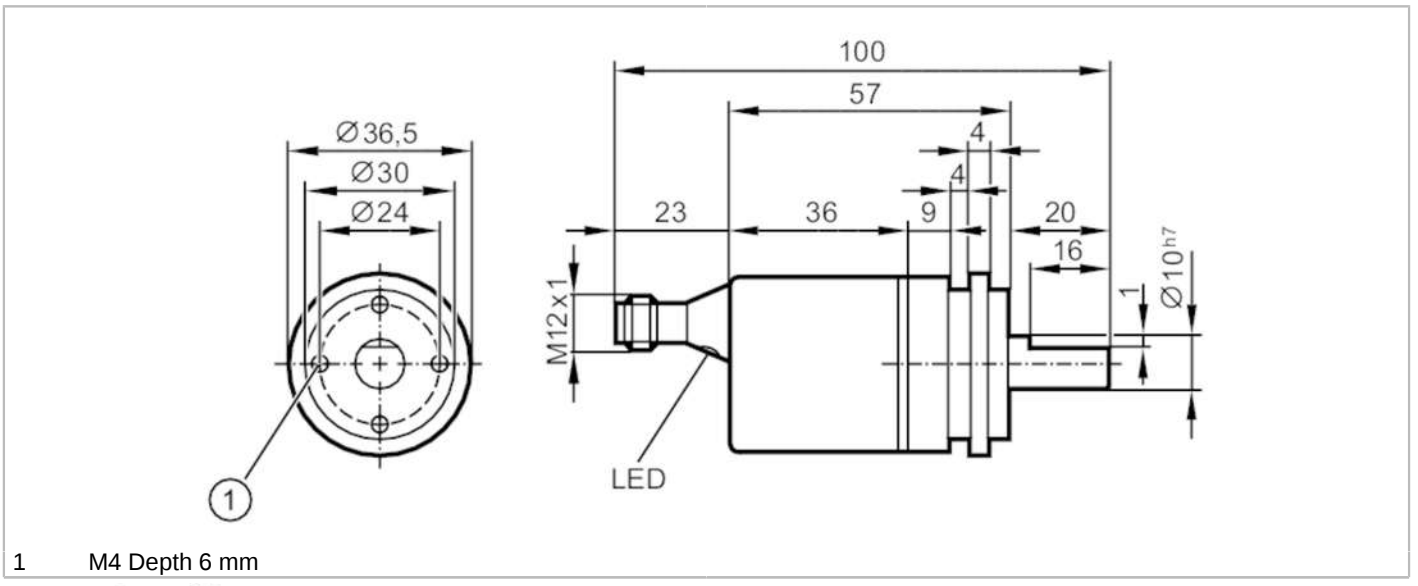

1 M4 Depth 6 mm

Product characteristics		
Resolution		4096 steps; 4096 revolutions; 24 bit
Communication interface		CAN
Shaft design		solid shaft
Shaft diameter	[mm]	10
Application		
Function principle		absolute
Revolution type		multiturn
Electrical data		
Operating voltage	[V]	9...30 DC; ("supply class 2" to cULus)
Current consumption	[mA]	< 100; ((10 V DC) ; ≤ 50 (24 V DC))
Protection class		III
Reverse polarity protection		yes
Outputs		
Short-circuit protection		yes
Code		binary
Measuring/setting range		
Resolution		4096 steps; 4096 revolutions; 24 bit
Accuracy / deviations		
Accuracy	[°]	0.08
Software / programming		
Parameter setting options		CAN parameter; scaling; preset; Baud rate; direction of rotation; Node ID
Interfaces		
Communication interface		CAN
CAN		
Protocol		CANopen

RM9001

Absolute multiturn encoder with solid shaft

RMS0024-C24UST

Factory settings		Baud rate: 125 kBit/s
		node ID: 32
Version		DSP - 406 V3.1; DS 301 V4.02; DS 306 V2.0
Operating conditions		
Ambient temperature	[°C]	-40...85
Protection		IP 68; IP 69K
Tests / approvals		
Shock resistance		200 g (11 ms)
Vibration resistance		30 g (10...1000 Hz)
MTTF	[years]	240
Mechanical data		
Weight	[g]	233
Dimensions	[mm]	Ø 36.5 / L = 100
Materials		flange: aluminium; housing cap: steel scratch-resistant cathodic dip coating
Max. revolution, mechanical	[U/min]	6000
Max. starting torque	[Nm]	5
Reference temperature torque	[°C]	20
Shaft design		solid shaft
Shaft diameter	[mm]	10
Shaft material		steel (1.4104)
Max. shaft load axial (at the shaft end)	[N]	180
Max. shaft load radial (at the shaft end)	[N]	180
Fixing flange		synchro-flange
Displays / operating elements		
Display	Preoperational Mode	LED, green
	Operational Mode	LED, green flashing
	error message	LED, red flashing

Electrical connection

Connector: 1 x M12, axial; coding: A

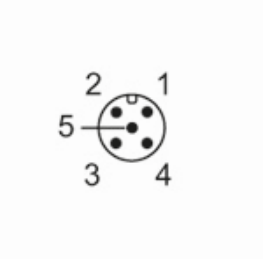

1	CAN_GND
2	VBBc
3	GND (PE)
4	CAN_High
5	CAN_Low