# EVC914

## Connection cable

VSTGN040MSS0005K04STAN040MSS

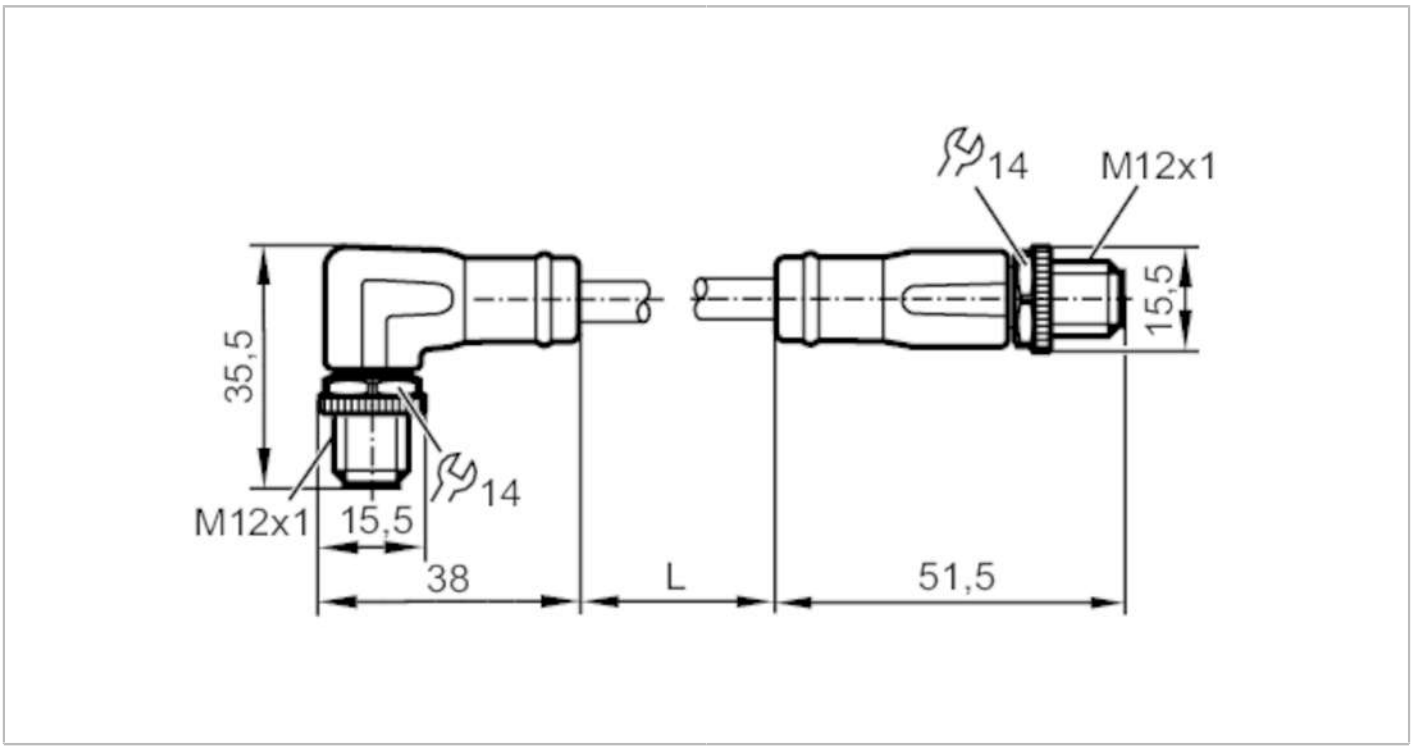


| | | |
|---|---|---|
| **Application** | | |
| Special feature | | Free from silicone; Halogen-free; Gold-plated contacts; Screened cable; Drag chain suitability |
| Design | | Ethernet cable, D-coded |
| Application | | Industrial Ethernet; CAT5/CAT5e; 100 Mbit/s; Industrial applications / factory automation |
| Free from silicone | | yes |
| **Electrical data** | | |
| Operating voltage | [V] | 30 AC / 60 DC |
| Protection class | | III |
| Max. current load total | [A] | 4 |
| **Operating conditions** | | |
| Ambient temperature | [°C] | -25...90 |
| Ambient temperature (moving) | [°C] | -25...90 |
| Protection | | IP 65; IP 67 |
| **Mechanical data** | | |
| Weight | [g] | 371.9 |
| Moulded-body material | | TPU |
| Material nut | | brass, nickel-plated |
| Drag chain suitability | | yes |
| Drag chain suitability | bending radius for flexible use | min. 10 x cable diameter |
| | travel speed | max. 3.3 m/s for a horizontal travel length of 5 m and max. acceleration of 5 m/s² |
| | bending cycles | > 3 Mio. |
| | torsional strain | ± 180 °/m |

# EVC914

## Connection cable

VSTGN040MSS0005K04STAN040MSS

### Remarks

| | |
|---|---|
| Pack quantity | 1 pcs. |

### Electrical connection - plug

Connector: 1 x M12, angled; coding: D; Moulded body: TPU, black; Locking: brass, nickel-plated; Contacts: gold-plated; Tightening torque: 0.6...1.2 Nm; Shielded connection cable: screen connected

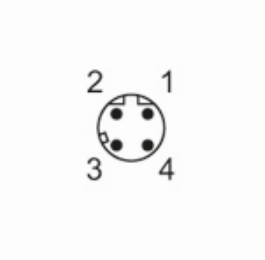


### Electrical connection

Cable: 5 m, PUR, Halogen-free, green, Ø 6.5 mm, shielded; PROFINET Type C; 4 x 0.34 mm² (7 x Ø 0.25 mm )

Connection

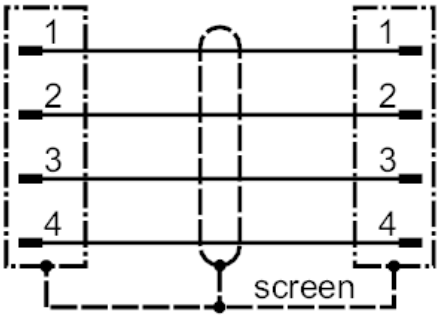


### Electrical connection - plug

Connector: 1 x M12, straight; coding: D; Moulded body: TPU, black; Locking: brass, nickel-plated; Contacts: gold-plated; Tightening torque: 0.6...1.2 Nm; Shielded connection cable: screen connected

