24560-051 EUROPACPRO COVER PLATE, UNIVERSAL, 84 HP, 175 MM

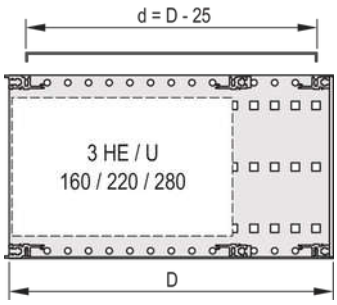

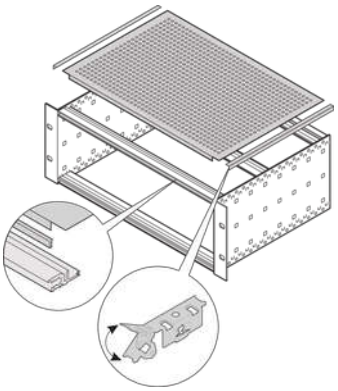

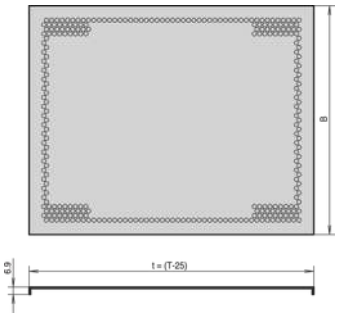

KEY FEATURES

- Shielding is provided by optional EMC stainless steel gaskets, between cover plate and side panel
- For variable positioning of horizontal rails e.g. for PCBs with non-standard formats
- Perforation degree 58%
- Suitable for use with all horizontal rails

PRODUCT ATTRIBUTES

- Product Type: Cover Plate
- Product Family: EuropacPRO
- Type: Universal
- Rack Width: 84 HP
- Depth: 175 mm
- Package Quantity: 1
- Package Unit: Pair

ADDITIONAL PRODUCT DETAILS

A cover plate is used for electromagnetic shielding or as mechanical protection. The cover can be used is non-standard boards will be assembled into the subrack.

In addition, 4 contact strips per subrack are required to affix cover to horizontal rail.

CERTIFICATIONS

RoHS COMPLIANT

North America
All locations
+1.763.422.2661
Chat with us:
schroff.nvent.com

Europe
Straubenhardt, Germany
+49.7082.794.0
Betschdorf, France
+33.3.88.90.64.90
Warsaw, Poland
+48.22.209.98.35
Assago, Italy
+39.02.932.7141
Chat with us:
schroff.nvent.com

Asia
Shanghai, China
+86.21.2412.6943
Qingdao, China
+86.532.8771.6101
Singapore
+65.6768.5800
Shin-Yokohama, Japan
+81.45.476.0271
Chat with us:
schroff.nvent.com

Middle East & India
Dubai, United Arab Emirates
+971.4.378.1700
Bangalore, India
+91.80.6715.2001
Istanbul, Turkey
+90.216.250.7374
Chat with us:
schroff.nvent.com

nVent

Our powerful portfolio of brands:
nVent.com **CADDY ERICO HOFFMAN RAYCHEM SCHROFF TRACER**

© 2023 nVent. All nVent marks and logos are owned or licensed by nVent Services GmbH or its affiliates. All other trademarks are the property of their respective owners.

nVent reserves the right to change specifications without notice.