

ROBUST-BOXES

Subject to technical modification without notice. Typographical and other errors do not justify any claim for damages.
Stand: 03/01 usa *Copyright © 1999 OKW Gehäusesysteme KG, Buchen, Germany (http://www.okw.com)*

YOUR ADVANTAGE

- Two standard materials: ABS – approved as a terminal mounting case or as polycarbonate – a solid and robust case, with high heat resistance for use in adverse environments.
- Easy-assembly construction. The case shells can be used as either top or base section.
- Solid and sealed up to IP 66.
- The cover fixings are outside of the sealed area. The fixing screws are rust proof and captured in the cover.
- There is an area recessed by min. 0.031" for the mounting of membrane keyboards.
- Colourful cover strips for coding (as an alternative to the standard version in light grey).
- Variable. 11 basic dimensions in 2 and / or 3 different heights.
- Applicable as desk top case and wall-mounting case.
- Large variety of accessories, e.g. case feet, wall-mounting brackets, PCB support etc.







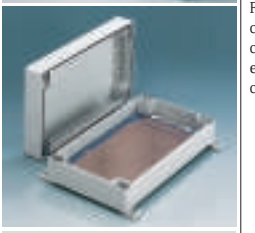

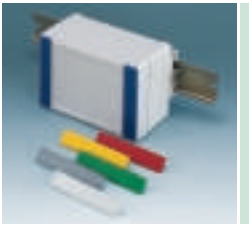

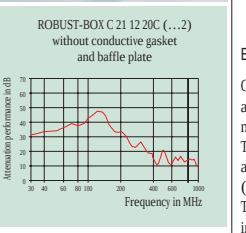

SEALED, ROBUST, CONVINCING DESIGN.

Two case ranges available in ABS and polycarbonate with the same easy-assembly construction and a wide range of applications.

The construction, using cover strips in the screw areas, gives the user various identification options. This means that by using different coloured cover strips, the user can code his equipment, e.g. installation cases for ventilation with blue cover strips, for heating with red cover strips etc.

APPLICATIONS

This case system is especially suitable for a wide range of electric installations, e.g. heating, climate, ventilation, machine building and construction units. The system is also ideal for many electronic applications.
Further applications are control units, machine controller, internal and external sensors, hand-held control units etc.

EMC

Cases marked with ϟ are available with aluminium metallization on demand. The shielding effect amounts to approx 30-35 dB (please refer to diagram). The bonding can be improved by contact strips.
See pages 207-209.

MODIFICATIONS AS PER CUSTOMER'S REQUIREMENTS

Machining on modern CNC-controlled machines. Lacquering. Silk screen and tampo printing.

Important: Please appoint the parts with or without groove.

See pages 210-213.

ROBUST-BOX WIDTH 3.150"

Outside dimensions in inch

Length	Width	Height
3.150	3.150	2.362 / 3.150
4.724	3.150	2.362 / 3.150
6.299	3.150	2.362 / 3.150
9.449	3.150	2.362 / 3.150



ROBUST-BOX WIDTH 4.724"

Outside dimensions in inch

Length	Width	Height
4.724	4.724	2.362 / 3.543
7.874	4.724	2.362 / 3.543
9.449	4.724	2.362 / 3.543



ROBUST-BOX WIDTH 6.299"

Outside dimensions in inch

Length	Width	Height
6.299	6.299	2.362 / 3.543
9.449	6.299	2.362 / 3.543
new:		
9.449	6.299	4.724



ROBUST-BOX in polycarbonate with transparent top on demand.

STANDARD COLOURS

One-coloured: light grey, RAL 7035.

Two-coloured: case light grey, RAL 7035; cover strips alternatively in silver grey, RAL 7001 / red, RAL 3020 / yellow, RAL 1023 / green, RAL 6024 or blue, RAL 5017. (Colourful cover strips see accessories on page 89).

See also colour chart page 214.

MATERIAL

ABS (UL 94 HB) or polycarbonate (UL 94 HB). Please refer to the specifications pages 215-217.

NEW IN PROGRAM



ROBUST-BOX WIDTH 7.874"

11.811 x 7.874 x 3.150/4.724/6.299



ROBUST-BOX WIDTH 9.449"

14.173 x 9.449 x 3.150/4.724/6.299

ROBUST-BOX, WIDTH 3.150"

VERSION I

Top and base
ABS (UL 94 HB);
colour: light grey, RAL 7035.

VERSION II

Top and base
polycarbonate (UL 94 HB);
colour: light grey, RAL 7035.



SUPPLY

Two case shells (one with groove, one with tongue) with gasket; each with two pairs of cover strips (the base ones with two holes for the rubber feet) in light grey.
Assembly kit.

Detailed drawing available on demand in dwg or dxf format.

⊕ ⊕ = Type of screw for case fixing: cross head

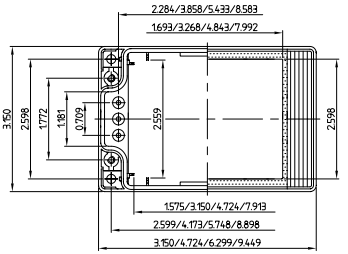

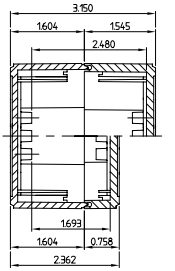

(Part-No. with ϟ see EMC page 82)

⊕ Z (PZ2)

CASE LENGTH 3.150"

Part-No.	Version	Outside dim. in inch L	W	H
C 20 08 081 ϟ	I	3.150	3.150	2.362
C 21 08 081 ϟ	I	3.150	3.150	3.150
C 20 08 082 ϟ	II	3.150	3.150	2.362
C 21 08 082 ϟ	II	3.150	3.150	3.150

CASE LENGTH 6.299"

Version	Outside dim. in inch L	W	H	Part-No.
I	6.299	3.150	2.362	C 20 08 161 ϟ
I	6.299	3.150	3.150	C 21 08 161 ϟ
II	6.299	3.150	2.362	C 20 08 162 ϟ
II	6.299	3.150	3.150	C 21 08 162 ϟ

CASE LENGTH 4.724"

Part-No.	Version	Outside dim. in inch L	W	H
C 20 08 121 ϟ	I	4.724	3.150	2.362
C 21 08 121 ϟ	I	4.724	3.150	3.150
C 20 08 122 ϟ	II	4.724	3.150	2.362
C 21 08 122 ϟ	II	4.724	3.150	3.150

CASE LENGTH 9.449"

Version	Outside dim. in inch L	W	H	Part-No.
I	9.449	3.150	2.362	C 20 08 241 ϟ
I	9.449	3.150	3.150	C 21 08 241 ϟ
II	9.449	3.150	2.362	C 20 08 242 ϟ
II	9.449	3.150	3.150	C 21 08 242 ϟ

ROBUST-BOX, WIDTH 4.724"

SUPPLY

Two case shells (one with groove, one with tongue) with gasket; each with two pairs of cover strips (the base ones with two holes for the rubber feet) in light grey.
Assembly kit.



VERSION I

Top and base
ABS (UL 94 HB);
colour: light grey, RAL 7035.

VERSION II

Top and base
polycarbonate (UL 94 HB);
colour: light grey, RAL 7035.

Detailed drawing available on demand in dwg or dxf format.

⊕ ⊕ = Type of screw for case fixing: cross head

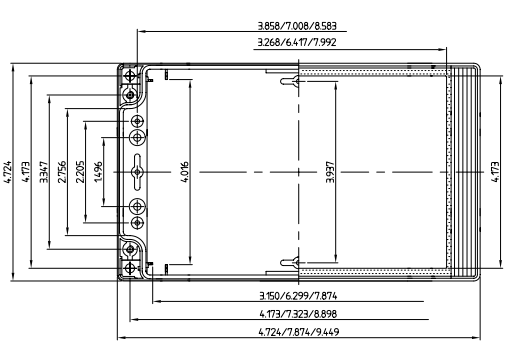

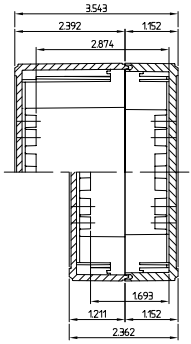

(Part-No. with ϟ see EMC page 82)

⊕ Z (PZ2)

Part-No.	CASE LENGTH 4.724" Version	Outside dim. in inch L	W	H
C 20 12 121 ϟ	I	4.724	4.724	2.362
C 21 12 121 ϟ	I	4.724	4.724	3.543
C 20 12 122 ϟ	II	4.724	4.724	2.362
C 21 12 122 ϟ	II	4.724	4.724	3.543

CASE LENGTH 7.874" Version	Outside dim. in inch L	W	H	Part-No.
I	7.874	4.724	2.362	C 20 12 201 ϟ
I	7.874	4.724	3.543	C 21 12 201 ϟ
II	7.874	4.724	2.362	C 20 12 202 ϟ
II	7.874	4.724	3.543	C 21 12 202 ϟ

ACCESSORIES (separately available, see pages 89-90.)

Case feet for desktop applications	Robust hinge
Wall-mounting brackets	Security kit
Fastening elements to DIN-rails	PCB supports
Cover strips	Punched plates with clips to insert PCBs
Securing hinge for the cover	DIN-rails

CASE LENGTH 9.449" Version	Outside dim. in inch L	W	H	Part-No.
I	9.449	4.724	2.362	C 20 12 241 ϟ
I	9.449	4.724	3.543	C 21 12 241 ϟ
II	9.449	4.724	2.362	C 20 12 242 ϟ
II	9.449	4.724	3.543	C 21 12 242 ϟ

ROBUST-BOXES

ROBUST-BOX, WIDTH 6.299"

VERSION I

Top and base
ABS (UL 94 HB);
colour: light grey, RAL 7035.

VERSION II

Top and base
polycarbonate (UL 94 HB);
colour: light grey, RAL 7035.



SUPPLY

Two case shells (one with groove, one with tongue) with gasket; each with two pairs of cover strips (the base ones with two holes for the rubber feet) in light grey. Assembly kit.



Detailed drawing available on demand in dwg or dxf format.

= Type of screw for case fixing: cross head

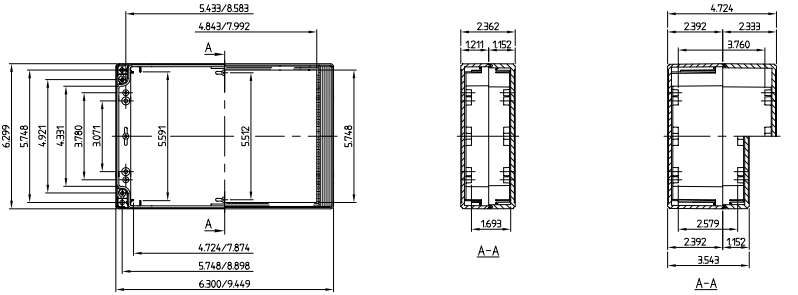

(Part-No. with ϟ see EMC page 82)

Z (PZ2)

Part-No.	CASE LENGTH 6.299" Version	Outside dim. in inch L	W	H	CASE LENGTH 9.449" Version	Outside dim. in inch L	W	H	Part-No.
C 20 16 161 ϟ	I	6.299	6.299	2.362	I	9.449	6.299	2.362	C 20 16 241 ϟ
C 21 16 161 ϟ	I	6.299	6.299	3.543	I	9.449	6.299	3.543	C 21 16 241 ϟ
					I	9.449	6.299	4.724	C 24 16 241 ϟ
C 20 16 162 ϟ	II	6.299	6.299	2.362	II	9.449	6.299	2.362	C 20 16 242 ϟ
C 21 16 162 ϟ	II	6.299	6.299	3.543	II	9.449	6.299	3.543	C 21 16 242 ϟ
					II	9.449	6.299	4.724	C 24 16 242 ϟ

ROBUST-BOX, WIDTH 7.874"

SUPPLY

Two case shells (one with groove, one with tongue) with gasket; cover strips (the base ones with holes for the rubber feet) in light grey .
Assembly kit.





VERSION I

Top and base
ABS (UL 94 HB);
colour: light grey, RAL 7035.

VERSION II

Top and base
polycarbonate (UL 94 HB);
colour: light grey, RAL 7035.

Detailed drawing available on demand in dwg or dxf format.

= Type of screw for case fixing: cross head

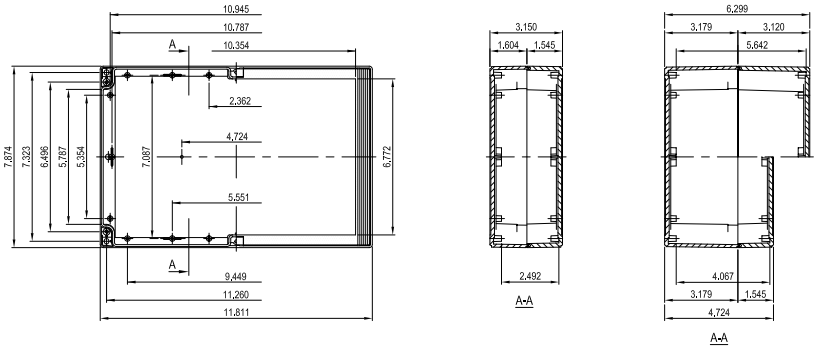

Z (PZ2)

ACCESSORIES (separately available, see pages 89-90.)

Case feet for desktop applications
Wall-mounting brackets
PCB supports
Robust hinge
Security kit

CASE LENGTH 11.811"

Version	Outside dim. in inch			Part-No.
	L	W	H	
I	11.811	7.874	3.150	C 21 20 301
I	11.811	7.874	4.724	C 24 20 301
I	11.811	7.874	6.299	C 25 20 301
II	11.811	7.874	3.150	C 21 20 302
II	11.811	7.874	4.724	C 24 20 302
II	11.811	7.874	6.299	C 25 20 302

ROBUST-BOXES

ROBUST-BOX, WIDTH 9.449"

VERSION I

Top and base
ABS (UL 94 HB);
colour: light grey, RAL 7035.

VERSION II

Top and base
polycarbonate (UL 94 HB);
colour: light grey, RAL 7035.



SUPPLY

Two case shells (one with groove, one with tongue) with gasket; cover strips (the base ones with holes for the rubber feet) in light grey .
Assembly kit.



Detailed drawing available on demand in dwg or dxf format.

= Type of screw for case fixing: cross head

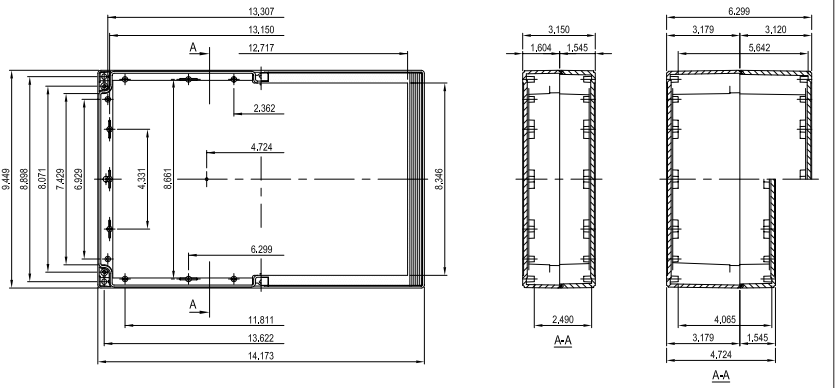

Z (PZ2)

CASE LENGTH 14.173"

Part-No.	Version	Outside dim. in inch L	W	H
C 21 24 361	I	14.173	9.449	3.150
C 24 24 361	I	14.173	9.449	4.724
C 25 24 361	I	14.173	9.449	6.299
C 21 24 362	II	14.173	9.449	3.150
C 24 24 362	II	14.173	9.449	4.724
C 25 24 362	II	14.173	9.449	6.299

ACCESSORIES (separately available, see pages 89-90.)

Case feet for desktop applications
Wall-mounting brackets
PCB supports
Robust hinge
Security kit

When using the case for desktop applications. Because of levelling out the length's tolerance of the cover strips we recommend to glue the case feet of sizes 200x300 and 240x360 mm.

Supply:
4 pieces

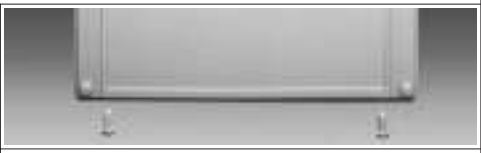

CASE FEET

Part-No.
C 22 99 018

Elements for exterior wall-mounting after assembly of the unit.

Supply:
4 pieces, fixing screws

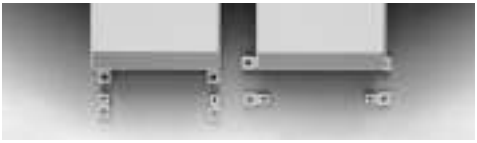

WALL-MOUNTING-BRACKETS

Part-No.
C 22 99 028

For fastening the cases to DIN-rails according to DIN EN 50 022 and DIN EN 50 035.

Supply:
2 fastening elements, assembly kit

DIN-rails see page 90.



FASTENING ELEMENTS TO DIN-RAILS

for ROBUST-BOX	Part-No.
width 3.150"	C 22 01 088
width 4.724"	C 22 03 128
width 6.299"	C 22 04 168

For securing the cover, e.g. during servicing. Can be fitted to any case side. Cannot be used with PCB mounting kit. Not applicable for sizes 200 x 300 and 240 x 360.

Supply:
2 securing hinges, fixing screws



SECURING HINGE FOR THE COVER

Part-No.
C 22 99 031

Suitable for case 4.724", 6.299", 7.874" and 9.449" length or width. Additional machining (drilling) required.

Supply:
2 complete hinges



HINGE

Part-No.
C 22 99 088

For use with lead tags.

Supply as security kit:
4 plugs, 2 cover strips with holes for the top, standard colour

Supply security plug as a single part:
1 plug



SECURITY KIT* / SECURITY PLUG**

for ROBUST-BOX	Part-No.
width 3.150"	C 22 99 048*
width 4.724"	C 22 99 042*
width 6.299"	C 22 99 046*
all sizes	C 22 99 040**

Optionally supplied to the light grey coloured standard versions. Simply clip into top or base. Pair of cover strips with 2 holes to put in rubber feet or security plug.



COVER STRIPS

Supply:
2 cover strips with holes
2 cover strips without holes

Part numbers of the cover strips:

Colour	width 3.150"	width 4.724"	width 6.299"	Colour
silver grey, RAL 7001	C 22 01 082	C 22 03 123	C 22 04 162	silver grey, RAL 7001
red, RAL 3020	C 22 01 084	C 22 03 124	C 22 04 164	red, RAL 3020
yellow, RAL 1023	C 22 01 085	C 22 03 125	C 22 04 165	yellow, RAL 1023
green, RAL 6024	C 22 01 086	C 22 03 126	C 22 04 166	green, RAL 6024
blue, RAL 5017	C 22 01 087	C 22 03 127	C 22 04 167	blue, RAL 5017

ROBUST-BOX ACCESSORIES

PCB SUPPORT



For mounting pre-assembled PCB units.
Case size 7.874 x 4.724" will accept Eurocard size (3.937 x 6.299").

Supply:
2 supports (Eurocard size and width 4.724") or
4 supports (all other sizes), fixing kit

Part-No.	for ROBUST-BOX
C 22 99 058	7.874 x 4.724", for Eurocard size and all other cases width 4.724", 2 pieces
C 22 99 068	for all other sizes, 4 pieces

PCB MOUNTING KIT



For horizontally or vertically mounting of PCBs.

Supply:
2 punched plates,
12 clips

Rows

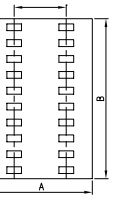

Part-No. 2.362" high	Part-No. 3.150" high	for ROBUST-BOX L x W	Rows	Outside dim. in inch A	Outside dim. in inch B
C 22 99 019	C 22 99 029	3.150 x 3.150"	2	1.772	1.988 / 2.776
C 22 99 039	C 22 99 049	4.724 x 3.150"	3	3.346	1.988 / 2.776
C 22 99 059	C 22 99 069	6.299 x 3.150"	5	4.921	1.988 / 2.776
C 22 99 079	C 22 99 089	9.449 x 3.150"	9	8.071	1.988 / 2.776
2.362" high	3.543" high				
C 22 99 099	C 22 99 049	4.724 x 4.724"	3	3.346	1.693 / 2.776
C 22 99 119	C 22 99 129	7.874 x 4.724"	5	6.496	1.693 / 2.874
C 22 99 139	C 22 99 089	9.449 x 4.724"	9	8.071	1.693 / 2.776
C 22 99 159	C 22 99 069	6.299 x 6.299"	5	4.921	1.693 / 2.776
C 22 99 139	C 22 99 089	9.449 x 6.299"	9	8.071	1.693 / 2.776

DIN-RAIL

DIN EN 50 022

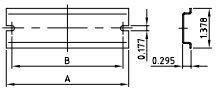

DIN EN 50 035

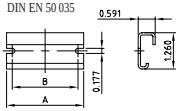

DIN EN 50 045

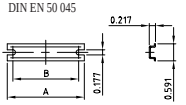

For fixings of clamps in the case.

Supply:
1 DIN-Rail

Part-No. DIN EN 50 022	Part-No. DIN EN 50 035	for DIN EN 50 045	for ROBUST-BOX	Outside dim. in inch A	Outside dim. in inch B
–	–	C 22 99 609	length 3.150"	2.677	2.283
C 22 99 419	C 22 99 519	C 22 99 619	lenght 4.724"	4.252	3.858
C 22 99 429	C 22 99 529	C 22 99 629	length 6.299"	5.827	5.433
C 22 99 439	C 22 99 539	C 22 99 639	length 7.874"	7.402	7.008
C 22 99 449	C 22 99 549	C 22 99 649	length 9.449"	8.976	8.583
C 22 99 459	C 22 99 559	C 22 99 659	width 4.724"	4.331	3.937
C 22 99 469	C 22 99 569	C 22 99 669	width 6.299"	5.906	5.512